# Hardware Design

## SIM900D_HD_V1.02

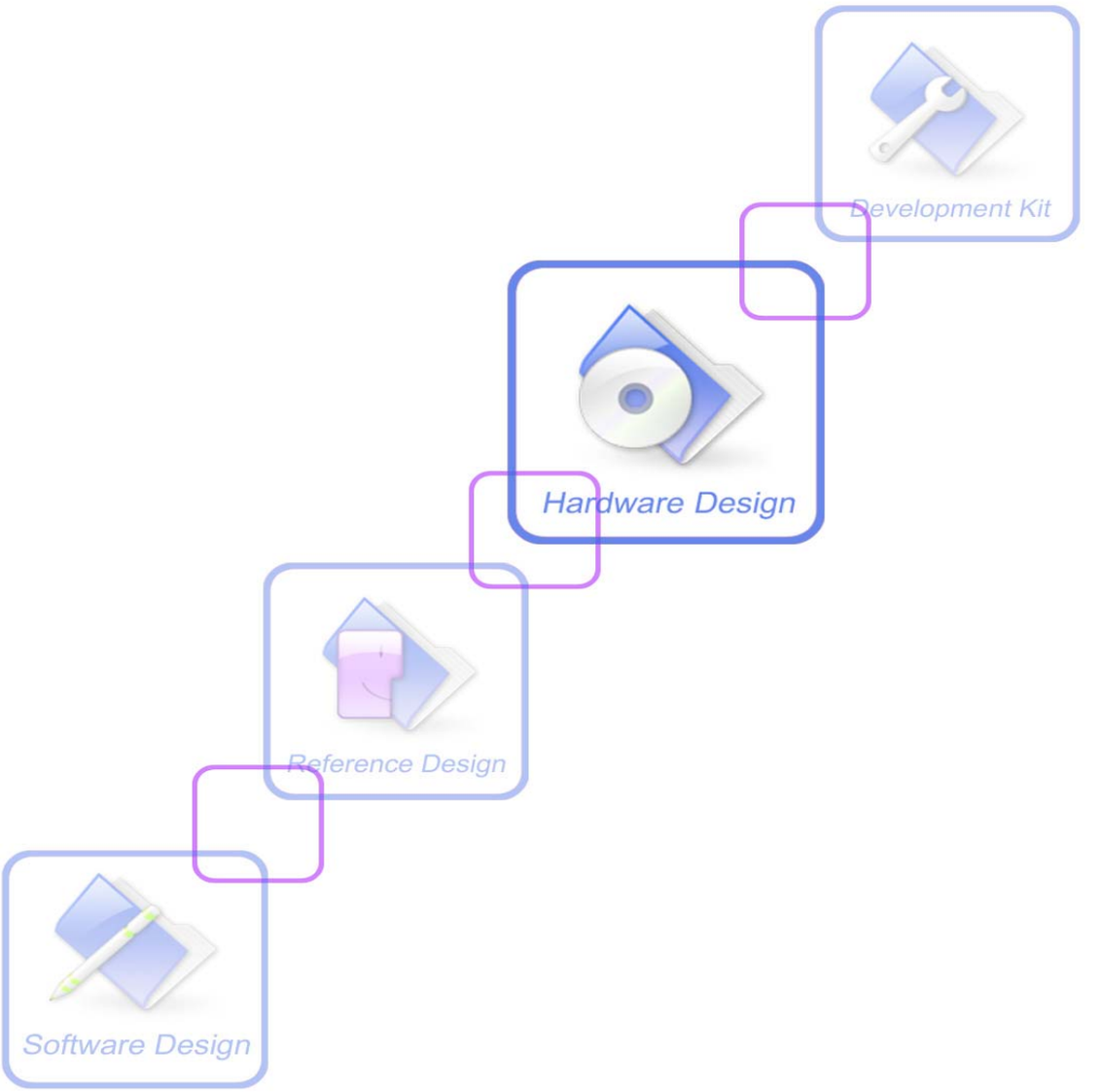

| | |
|---|---|
| **Document Title:** | SIM900D Hardware Design |
| **Version:** | 1.02 |
| **Date:** | 2010-04-09 |
| **Status:** | Release |
| **Document Control ID:** | SIM900D_HD_V1.02 |

**General Notes**

SIMCom offers this information as a service to its customers, to support application and engineering efforts that use the products designed by SIMCom. The information provided is based upon requirements specifically provided to SIMCom by the customers. SIMCom has not undertaken any independent search for additional relevant information, including any information that may be in the customer's possession. Furthermore, system validation of this product designed by SIMCom within a larger electronic system remains the responsibility of the customer or the customer's system integrator. All specifications supplied herein are subject to change.

**Copyright**

This document contains proprietary technical information which is the property of SIMCom Limited, copying of this document and giving it to others and the using or communication of the contents thereof, are forbidden without express authority. Offenders are liable to the payment of damages. All rights reserved in the event of grant of a patent or the registration of a utility model or design. All specification supplied herein are subject to change without notice at any time.

***Copyright © Shanghai SIMCom Wireless Solutions Ltd. 2010***

SIMCOM CONFIDENTIAL FILE

# Contents

Contents ..... 3
Version history ..... 7
1 Introduction ..... 8
1.1 Related Documents ..... 8
1.2 Terms and Abbreviations ..... 9
1.3 Safety Precautions ..... 11
2 SIM900D Overview ..... 13
2.1 SIM900D Key Features ..... 13
2.2 SIM900D Functional Diagram ..... 15
2.3 SIM900D Evaluation Board ..... 16
3 Application Interface ..... 18
3.1 SIM900D Pin Description ..... 18
3.2 Operating Modes ..... 21
3.3 Power Supply ..... 22
3.3.1 Power Supply Pins ..... 23
3.3.2 Minimizing Power Losses ..... 23
3.3.3 Monitoring Power Supply ..... 24
3.4 Power Up and Power Down Scenarios ..... 24
3.4.1 Turn on SIM900D ..... 24
3.4.2 Turn Off SIM900D ..... 26
3.4.3 Restart SIM900D Using the PWRKEY Pin ..... 28
3.5 Charging interface ..... 28
3.5.1 Battery pack characteristics ..... 29
3.5.2 Recommended battery pack ..... 30
3.5.3 Implemented charging technique ..... 30
3.5.4 Operating modes during charging ..... 31
3.5.5 Charger requirements ..... 32
3.6 Power Saving ..... 32
3.6.1 Minimum Functionality Mode ..... 33
3.6.2 Sleep Mode (Slow Clock Mode) ..... 33
3.6.3 Wake Up SIM900D from SLEEP Mode ..... 33
3.7 Summary of State Transitions (except SLEEP mode) ..... 33
3.8 RTC Backup ..... 34
3.9 Serial Interfaces ..... 36
3.9.1 Function of serial port & debug port supporting ..... 37
3.9.2 Software Upgrade and Software Debug ..... 38
3.10 Audio Interfaces ..... 40
3.10.1 Speaker Interface Configuration ..... 41
3.10.2 Microphone Interfaces Configuration ..... 42

SIMCOM CONFIDENTIAL FILE

3.10.3 Earphone Interface Configuration ..... 42
3.10.4 Referenced Electronic Characteristic ..... 42
3.11 SIM Card Interface ..... 44
3.11.1 SIM Card Application ..... 44
3.11.2 Design Considerations for SIM Card Holder ..... 45
3.12 LCD Display Interface ..... 46
3.13 ADC ..... 46
3.14 Behaviors of the RI ..... 47
3.15 Network Status Indication ..... 48
3.16 General Purpose Input Output (GPIO) ..... 48
3.17 PWM ..... 49
4 Antenna Interface ..... 50
4.1 Module RF Output Power ..... 50
4.2 Module RF Receive Sensitivity ..... 50
4.3 Module Operating Frequencies ..... 51
5 Electrical, Reliability and Radio Characteristics ..... 51
5.1 Absolute Maximum Ratings ..... 51
5.2 Operating Temperatures ..... 51
5.3 Power Supply Ratings ..... 52
5.4 Current Consumption ..... 53
5.5 Electro-Static Discharge ..... 54
6 Mechanics ..... 55
6.1 Mechanical Dimensions of SIM900D ..... 55
6.2 Top and Bottom View of the SIM900D ..... 58
6.3 PIN Assignment of SIM900D ..... 58
6.4 The Ramp-Soak-Spike Reflow Profile of SIM900D ..... 60

SIMCOM CONFIDENTIAL FILE

# Table Index

TABLE1: RELATED DOCUMENTS ..... 8
TABLE2: TERMS AND ABBREVIATIONS ..... 9
TABLE3: SIM900D KEY FEATURES ..... 13
TABLE4: CODING SCHEMES AND MAXIMUM NET DATA RATES OVER AIR INTERFACE ..... 15
TABLE5: PIN DESCRIPTION ..... 18
TABLE6: OVERVIEW OF OPERATING MODES ..... 21
TABLE7: SPECIFICATION OF RECOMMENDED BATTERY PACK ..... 30
TABLE8: OPERATING MODES ..... 31
TABLE9: AT COMMAND USUALLY USED IN CHARGE-ONLY MODE ..... 32
TABLE10: PIN DEFINITION OF THE SERIAL INTERFACES ..... 36
TABLE11: LOGIC LEVELS OF THE SERIAL PORT AND DEBUG PORT ..... 36
TABLE12: PIN DEFINITION OF THE AUDIO INTERFACE ..... 40
TABLE13: MIC INPUT CHARACTERISTICS ..... 43
TABLE14: AUDIO OUTPUT CHARACTERISTICS ..... 43
TABLE15: PIN DEFINITION OF THE SIM INTERFACE ..... 44
TABLE16: PIN DESCRIPTION (AMPHENOL SIM CARD HOLDER) ..... 46
TABLE17: PIN DEFINITION OF THE LCD INTERFACE ..... 46
TABLE18: ADC SPECIFICATION ..... 46
TABLE19: BEHAVIOURS OF THE RI ..... 47
TABLE20: WORKING STATE OF THE NETLIGHT ..... 48
TABLE21: PIN DEFINITION OF THE GPIO INTERFACE ..... 49
TABLE22: PIN DEFINITION OF THE PWM ..... 49
TABLE23: PIN DEFINITION OF THE ANT ..... 50
TABLE24: SIM900D CONDUCTED RF OUTPUT POWER ..... 50
TABLE25: SIM900D CONDUCTED RF RECEIVE SENSITIVITY ..... 50
TABLE26: SIM900D OPERATING FREQUENCIES ..... 51
TABLE27: ABSOLUTE MAXIMUM RATINGS ..... 51
TABLE28: SIM900D OPERATING TEMPERATURE ..... 51
TABLE29: SIM900D POWER SUPPLY RATINGS ..... 52
TABLE30: SIM900D CURRENT CONSUMPTION (VBAT=3.8V) ..... 53
TABLE31: THE ESD ENDURE STATUE MEASURED TABLE (TEMPERATURE: 25℃, HUMIDITY:45% ) ..... 54
TABLE32: PIN ASSIGNMENT ..... 59

SIMCOM CONFIDENTIAL FILE

# Figure Index

FIGURE1: SIM900D FUNCTIONAL DIAGRAM ..... 16
FIGURE2: TOP VIEW OF SIM900D EVB ..... 17
FIGURE3: REFERENCE CIRCUIT OF THE VBAT INPUT ..... 22
FIGURE4: REFERENCE CIRCUIT OF THE SOURCE POWER SUPPLY INPUT ..... 23
FIGURE5: VBAT VOLTAGE DROP DURING TRANSMIT BURST ..... 23
FIGURE6: TURN ON SIM900D USING DRIVING CIRCUIT ..... 25
FIGURE7: TURN ON SIM900D USING BUTTON ..... 25
FIGURE8: TIMING OF TURN ON SYSTEM USING PWRKEY ..... 25
FIGURE9: TIMING OF TURN OFF SYSTEM USING PWRKEY ..... 27
FIGURE10: TIMING OF RESTART SYSTEM ..... 28
FIGURE11: BATTERY CHARGER AND PACK ..... 29
FIGURE12: STATE TRANSITION ..... 34
FIGURE13: RTC SUPPLY FROM NON-CHARGEABLE BATTERY ..... 34
FIGURE14: RTC SUPPLY FROM RECHARGEABLE BATTERY ..... 35
FIGURE15: RTC SUPPLY FROM CAPACITOR ..... 35
FIGURE16: SEIKO XH414H-IV01E CHARGE CHARACTERISTIC ..... 35
FIGURE17: CONNECTION OF THE SERIAL INTERFACES ..... 37
FIGURE18: CONNECTION OF SOFTWARE UPGRADE AND SOFTWARE DEBUG ..... 38
FIGURE19: RS232 LEVEL CONVERTER CIRCUIT ..... 39
FIGURE20: SPEAKER INTERFACE CONFIGURATION ..... 41
FIGURE21: SPEAKER INTERFACE WITH AMPLIFIER CONFIGURATION ..... 41
FIGURE22: MICROPHONE INTERFACE CONFIGURATION ..... 42
FIGURE23: EARPHONE INTERFACE CONFIGURATION ..... 42
FIGURE24: REFERENCE CIRCUIT OF THE 6 PINS SIM CARD ..... 45
FIGURE25: AMPHENOL C707 10M006 512 2 SIM CARD HOLDER ..... 45
FIGURE26: SIM900D SERVICES AS RECEIVER ..... 47
FIGURE27: SIM900D SERVICES AS CALLER ..... 47
FIGURE28: REFERENCE CIRCUIT OF NETLIGHT ..... 48
FIGURE29: SIM900D TOP VIEW ..... 55
FIGURE30: SIM900D BOTTOM VIEW ..... 56
FIGURE31: SIM900D SIDE VIEW ..... 56
FIGURE32: FOOTPRINT RECOMMENDATION ..... 57
FIGURE33: TOP AND BOTTOM VIEW OF THE SIM900D ..... 58
FIGURE34: SIM900D PIN OUT DIAGRAM (TOP VIEW) ..... 58
FIGURE35: THE RAMP-SOAK-SPIKE REFLOW PROFILE OF SIM900D ..... 60

SIMCOM CONFIDENTIAL FILE

# Version history

| Date | Version | Description of change | Author |
|---|---|---|---|
| 2010-03-31 | 1.01 | Origin | Jing.zhou |
| 2010-04-09 | 1.02 | Changed GHOST mode to Charge-only mode | Jing.zhou |
| | | §3.4.1.1Update the Figure8: Timing of turn on system using PWRKEY | |
| | | §3.4.2.1Update the Figure9: Timing of turn off system using PWRKEY | |
| | | §4.2Update the Table25: SIM900D conducted RF receive sensitivity | |

SIMCOM CONFIDENTIAL

# 1 Introduction

This document describes the hardware interface of the SIMCom SIM900D module that connects to the specific application and the air interface. As SIM900D can be integrated with a wide range of applications, all functional components of SIM900D are described in great detail.

This document can help you quickly understand SIM900D interface specifications, electrical and mechanical details. With the help of this document and other SIM900D application notes, user guide, the SIM900D module can be used to design and set-up mobile applications quickly.

## 1.1 Related Documents

**Table1: Related documents**

| SN | Document name | Remark |
|---|---|---|
| [1] | SIM900_ATC | SIM900_ATC |
| [2] | ITU-T Draft new recommendation V.25ter: | Serial asynchronous automatic dialing and control |
| [3] | GSM 07.07: | Digital cellular telecommunications (Phase 2+); AT command set for GSM Mobile Equipment (ME) |
| [4] | GSM 07.10: | Support GSM 07.10 multiplexing protocol |
| [5] | GSM 07.05: | Digital cellular telecommunications (Phase 2+); Use of Data Terminal Equipment – Data Circuit terminating Equipment (DTE – DCE) interface for Short Message Service (SMS) and Cell Broadcast Service (CBS) |
| [6] | GSM 11.14: | Digital cellular telecommunications system (Phase 2+); Specification of the SIM Application Toolkit for the Subscriber Identity Module – Mobile Equipment (SIM – ME) interface |
| [7] | GSM 11.11: | Digital cellular telecommunications system (Phase 2+); Specification of the Subscriber Identity Module – Mobile Equipment (SIM – ME) interface |
| [8] | GSM 03.38: | Digital cellular telecommunications system (Phase 2+); Alphabets and language-specific information |
| [9] | GSM 11.10 | Digital cellular telecommunications system (Phase 2); Mobile Station (MS) conformance specification; Part 1: Conformance specification |
| [10] | AN_Serial Port | AN_Serial Port |

## 1.2 Terms and Abbreviations

**Table2: Terms and Abbreviations**

| Abbreviation | Description |
|---|---|
| ADC | Analog-to-Digital Converter |
| AMR | Adaptive Multi-Rate |
| ARP | Antenna Reference Point |
| ASIC | Application Specific Integrated Circuit |
| BER | Bit Error Rate |
| BTS | Base Transceiver Station |
| CHAP | Challenge Handshake Authentication Protocol |
| CS | Coding Scheme |
| CSD | Circuit Switched Data |
| CTS | Clear to Send |
| DAC | Digital-to-Analog Converter |
| DRX | Discontinuous Reception |
| DSP | Digital Signal Processor |
| DTE | Data Terminal Equipment (typically computer, terminal, printer) |
| DTR | Data Terminal Ready |
| DTX | Discontinuous Transmission |
| EFR | Enhanced Full Rate |
| EGSM | Enhanced GSM |
| EMC | Electromagnetic Compatibility |
| ESD | Electrostatic Discharge |
| ETS | European Telecommunication Standard |
| FCC | Federal Communications Commission (U.S.) |
| FDMA | Frequency Division Multiple Access |
| FR | Full Rate |
| GMSK | Gaussian Minimum Shift Keying |
| GPRS | General Packet Radio Service |
| GSM | Global Standard for Mobile Communications |
| HR | Half Rate |
| I/O | Input/Output |
| IC | Integrated Circuit |
| IMEI | International Mobile Equipment Identity |
| kbps | Kilo bits per second |
| LED | Light Emitting Diode |

| Abbreviation | Description |
|---|---|
| Li-Ion | Lithium-Ion |
| MO | Mobile Originated |
| MS | Mobile Station (GSM engine), also referred to as TE |
| MT | Mobile Terminated |
| PAP | Password Authentication Protocol |
| PBCCH | Packet Switched Broadcast Control Channel |
| PCB | Printed Circuit Board |
| PCS | Personal Communication System, also referred to as GSM 1900 |
| PDU | Protocol Data Unit |
| PPP | Point-to-point protocol |
| RF | Radio Frequency |
| RMS | Root Mean Square (value) |
| RTC | Real Time Clock |
| RX | Receive Direction |
| SIM | Subscriber Identification Module |
| SMS | Short Message Service |
| TDMA | Time Division Multiple Access |
| TE | Terminal Equipment, also referred to as DTE |
| TX | Transmit Direction |
| UART | Universal Asynchronous Receiver & Transmitter |
| URC | Unsolicited Result Code |
| USSD | Unstructured Supplementary Service Data |
| VSWR | Voltage Standing Wave Ratio |
| Vmax | Maximum Voltage Value |
| Vnorm | Normal Voltage Value |
| Vmin | Minimum Voltage Value |
| VIHmax | Maximum Input High Level Voltage Value |
| VIHmin | Minimum Input High Level Voltage Value |
| VILmax | Maximum Input Low Level Voltage Value |
| VILmin | Minimum Input Low Level Voltage Value |
| VImax | Absolute Maximum Input Voltage Value |
| VImin | Absolute Minimum Input Voltage Value |
| VOHmax | Maximum Output High Level Voltage Value |
| VOHmin | Minimum Output High Level Voltage Value |
| VOLmax | Maximum Output Low Level Voltage Value |
| VOLmin | Minimum Output Low Level Voltage Value |
| Inorm | Normal Current |

| Abbreviation | Description |
|---|---|
| Imax | Maximum Load Current |
| *Phonebook abbreviations* | |
| FD | SIM fix dialing phonebook |
| LD | SIM last dialing phonebook (list of numbers most recently dialed) |
| MC | Mobile Equipment list of unanswered MT calls (missed calls) |
| ON | SIM (or ME) own numbers (MSISDNs) list |
| RC | Mobile Equipment list of received calls |
| SM | SIM phonebook |
| NC | Not connect |

## 1.3 Safety Precautions

The following safety precautions must be observed during all phases of the operation. Usage, service or repair of any cellular terminal or mobile incorporating SIM900D module. Manufactures of the cellular terminal should send words the following safety information to users and operating personnel and to incorporate these guidelines into all manuals supplied with the product. If not so, SIMCom does not take on any liability for customer failure to comply with these precautions.

When in a hospital or other health care facility, observe the restrictions about the use of mobiles. Switch the cellular terminal or mobile off, medical equipment may be sensitive to not operate normally for RF energy interference.

Switch off the cellular terminal or mobile before boarding an aircraft. Make sure it be switched off. The operation of wireless appliances in an aircraft is forbidden to prevent interference with communication systems. Forget to think much of these instructions may lead to the flight safety or offend against local legal action, or both.

Do not operate the cellular terminal or mobile in the presence of flammable gases or fumes. Switch off the cellular terminal when you are near petrol stations, fuel depots, chemical plants or where blasting operations are in progress. Operation of any electrical equipment in potentially explosive atmospheres can constitute a safety hazard.

Your cellular terminal or mobile receives and transmits radio frequency energy while switched on. RF interference can occur if it is used close to TV sets, radios, computers or other electric equipment.

Road safety comes first! Do not use a hand-held cellular terminal or mobile when driving a vehicle, unless it is securely mounted in a holder for hands free operation. Before making a call with a hand-held terminal or mobile, park the vehicle.

GSM cellular terminals or mobiles operate over radio frequency signals and cellular networks and cannot be guaranteed to connect in all conditions, for example no mobile fee or a invalid SIM card. While you are in this condition and need emergent help, Please Remember using emergency calls. In order to make or receive calls, the cellular terminal or mobile must be switched on and in a service area with adequate cellular signal strength.

Some networks do not allow for emergency call if certain network services or phone features are in use (e.g. lock functions, fixed dialing etc.). You may have to deactivate those features before you can make an emergency call.

Also, some networks require that a valid SIM card be properly inserted in the cellular terminal

SIMCOM CONFIDENTIAL

# 2 SIM900D Overview

Designed for global market, SIM900D is a quad-band GSM/GPRS engine that works on frequencies GSM 850MHz, EGSM 900MHz, DCS 1800MHz and PCS 1900MHz. SIM900D features GPRS multi-slot class 10/ class 8 (optional) and supports the GPRS coding schemes CS-1, CS-2, CS-3 and CS-4.

With a tiny configuration of 33mm x 33mm x 3mm, SIM900D can meet almost all the space requirements in your applications, such as M2M, smart phone, PDA, FWP, and other mobile device.

The physical interface to the mobile application is a 48-pin SMT pad, which provides all hardware interfaces between the module and customers' boards.

The hardware package of 48 pins

- 9 GND pins and 2 VBAT pins
- 2 pins are programmable as General Purpose I/O .This gives you the flexibility to develop customized applications.
- Serial port and Debug port can develop your applications easily.
- Two audio channels include two microphone inputs and two speakers' outputs. This can be easily configured by AT command.

With the charge circuit integrated inside the SIM900D, it is very suitable for the battery power application.

The SIM900D provides RF antenna interface. And customer's antenna should be located in the customer's main board and connect to module's antenna pad through micro strip line or other type RF traces whose impendence must be controlled in 50Ω.

The SIM900D is designed with power saving technique so that the current consumption is as low as 1.2mA in SLEEP mode.

The SIM900D is integrated with the TCP/IP protocol; extended TCP/IP AT commands are developed for customers to use the TCP/IP protocol easily, which is very useful for those data transfer applications.

The modules are fully RoHS compliant to EU regulation.

SIMCOM CONFIDENTIAL FILE

## 2.1 SIM900D Key Features

**Table3: SIM900D key features**

| Feature | Implementation |
|---|---|
| Power supply | Single supply voltage 3.4V – 4.5V |
| Power saving | Typical power consumption in SLEEP mode is 1.5mA ( BS-PA-MFRMS=2 ) |

| | |
|---|---|
| Frequency Bands | ● SIM900D Quad-band: GSM 850, EGSM 900, DCS 1800, PCS 1900. The SIM900D can search the 4 frequency bands automatically. The frequency bands also can be set by AT command.<br>● Compliant to GSM Phase 2/2+ |
| GSM class | Small MS |
| Transmitting power | ● Class 4 (2W) at GSM 850 and EGSM 900<br>● Class 1 (1W) at DCS 1800 and PCS 1900 |
| GPRS connectivity | ● GPRS multi-slot class 10 （default）<br>● GPRS multi-slot class 8 (option)<br>● GPRS mobile station class B |
| Temperature range | ● Normal operation: -30°C to +80°C<br>● Restricted operation: -40°C to -30°C and +80 °C to +85°C(1)<br>● Storage temperature -45°C to +90°C |
| DATA GPRS:<br><br><br><br><br><br><br><br><br>CSD: | ● GPRS data downlink transfer: max. 85.6 kbps<br>● GPRS data uplink transfer: max. 42.8 kbps<br>● Coding scheme: CS-1, CS-2, CS-3 and CS-4<br>● Supports the protocols PAP (Password Authentication Protocol) usually used for PPP connections.<br>● Integrates the TCP/IP protocol.<br>● Support Packet Switched Broadcast Control Channel (PBCCH)<br>● CSD transmission rates: 2.4, 4.8, 9.6, 14.4 kbps, non-transparent<br>● Unstructured Supplementary Services Data (USSD) support |
| SMS | ● MT, MO, CB, Text and PDU mode<br>● SMS storage: SIM card |
| FAX | Group 3 Class 1 |
| SIM interface | Support SIM card: 1.8V, 3V |
| External antenna | Antenna pad |
| Audio features | Speech codec modes:<br>● Half Rate (ETS 06.20)<br>● Full Rate (ETS 06.10)<br>● Enhanced Full Rate (ETS 06.50 / 06.60 / 06.80)<br>● Adaptive multi rate (AMR)<br>● Echo Cancellation<br>● Noise Suppression |
| Serial port and<br>Debug port | Serial Port:<br>● 7-wire modem interface with status and control lines, unbalanced, asynchronous.<br>● 1.2kbps to 115.2kbps.<br>● Serial Port can be used for AT commands or data stream.<br>● Supports RTS/CTS hardware handshake and software ON/OFF flow control.<br>● Multiplex ability according to GSM 07.10 Multiplexer Protocol.<br>● Autobauding supports baud rate from 1200 bps to 57600bps. |

| | |
|---|---|
| | Debug port:<br>● 2-wire null modem interface DBG_TXD and DBG_RXD.<br>● Can be used for debugging and upgrading firmware. |
| Phonebook management | Support phonebook types: SM, FD, LD, RC, ON, MC. |
| SIM Application Toolkit | Support SAT class 3, GSM 11.14 Release 99 |
| Real time clock | Implemented |
| Timer function | Programmable via AT command |
| Physical characteristics | Size: 33x 33 x 3 mm<br>Weight: 6.2g |
| Firmware upgrade | Firmware upgrade by debug port. |

***Note: The SIM900D does work, but deviations from the GSM specification may occur.***

**Table4: Coding schemes and maximum net data rates over air interface**

| Coding scheme | 1 Timeslot | 2 Timeslot | 4 Timeslot |
|---|---|---|---|
| CS-1: | 9.05kbps | 18.1kbps | 36.2kbps |
| CS-2: | 13.4kbps | 26.8kbps | 53.6kbps |
| CS-3: | 15.6kbps | 31.2kbps | 62.4kbps |
| CS-4: | 21.4kbps | 42.8kbps | 85.6kbps |

## 2.2 SIM900D Functional Diagram

The following figure shows a functional diagram of the SIM900D and illustrates the mainly functional part:

- The GSM baseband engine
- Flash and SRAM
- The GSM radio frequency part
- The antenna interface
- The Other interfaces

SIMCOM CONFIDENTIAL FILE

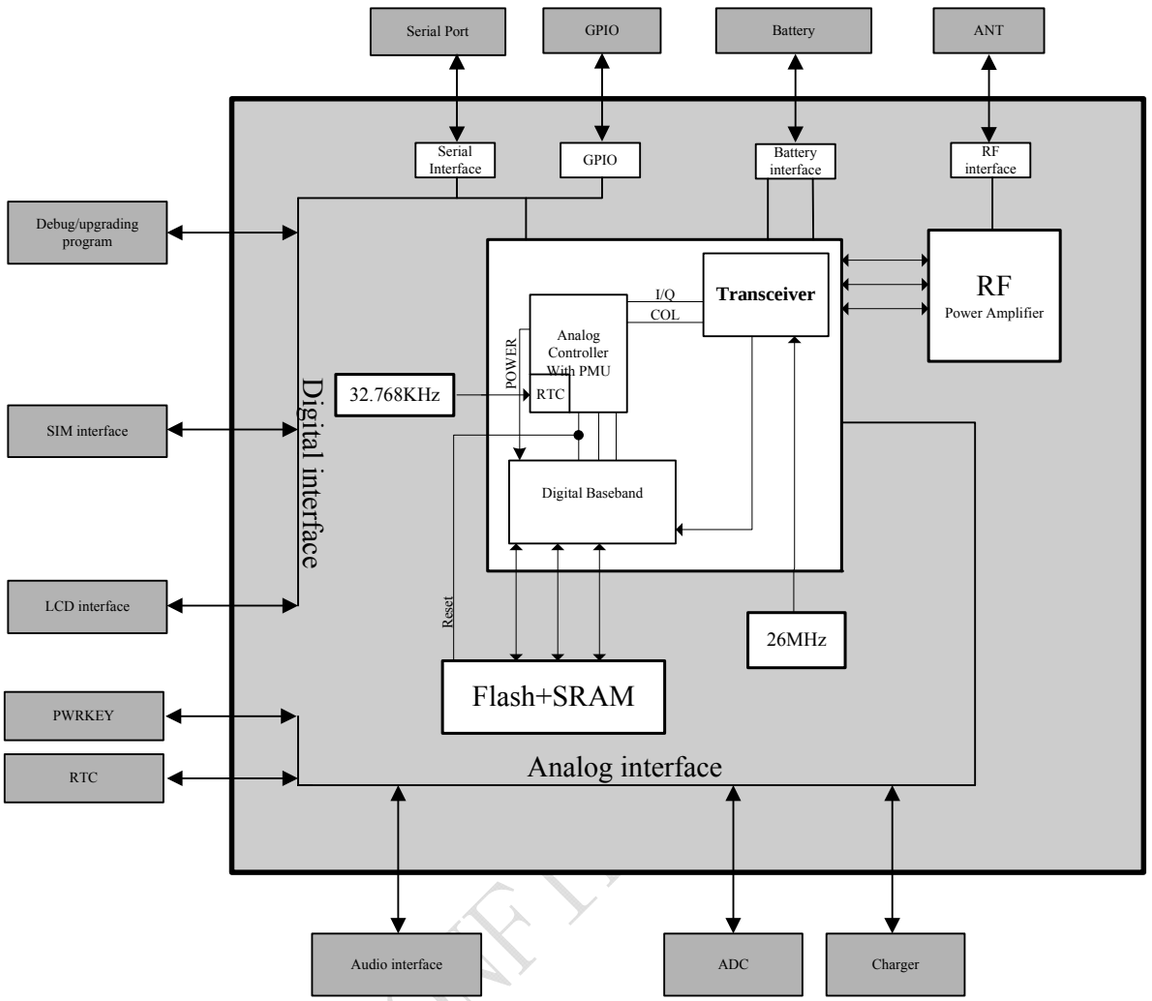


**Figure1: SIM900D functional diagram**

## 2.3 SIM900D Evaluation Board

In order to help you on the application of SIM900D, SIMCom can supply an Evaluation Board (EVB) that interfaces the SIM900D directly with appropriate power supply, SIM card holder, serial port, handset port, earphone port, antenna and all GPIO of the SIM900D.

SIMCOM CONFI

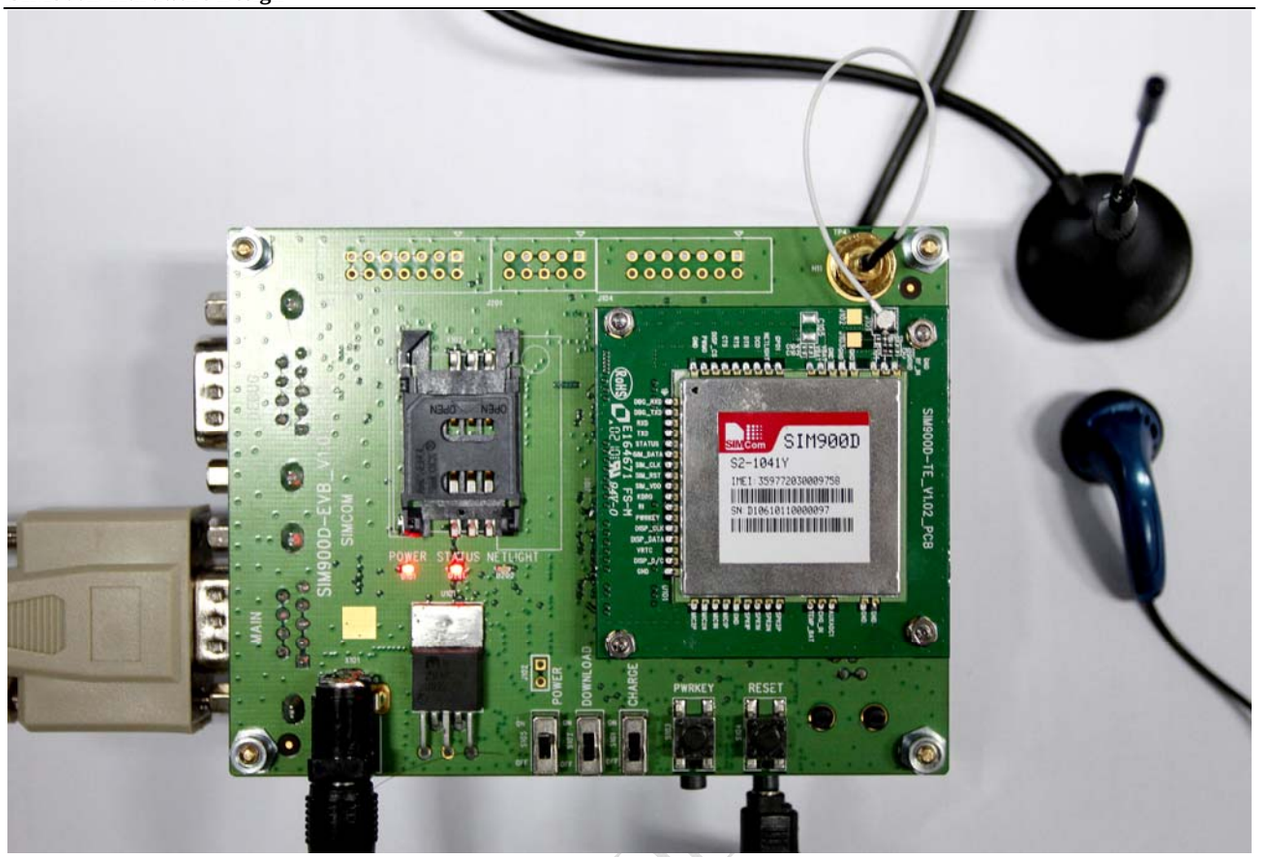


**Figure2: Top view of SIM900D EVB**

For details please refer to the *SIM900-EVB_UGD* document.

SIMCOM CONFIDENTIAL

# 3 Application Interface

SIM900D is equipped with a 48-pin SMT pad that connects to the cellular application platform. Sub-interfaces included in these SMT pads are described in detail in following chapters:

- Power supply and charging control *(please refer to Chapter 3.3 and 3.5)*
- Serial interface and Debug interface *(please refer to chapter3.9)*
- Two analog audio interfaces *(please refer to Chapter 3.10)*
- SIM interface *(please refer to Chapter 3.11)*

Electrical and mechanical characteristics of the SMT pad are specified in *Chapter 5.*

## 3.1 SIM900D Pin Description

**Table5: Pin description**

| **Power Supply** | | | | |
|---|---|---|---|---|
| PIN NAME | I/O | DESCRIPTION | DC CHARACTERISTICS | COMMENT |
| VBAT | I | 2 VBAT pins are dedicated to connect the supply voltage. The power supply of SIM900D has to be a single voltage source of VBAT= 3.4V...4.5V. It must be able to provide sufficient current in a transmit burst which typically rises to 2A | Vmax= 4.5V<br>Vmin=3.4V<br>Vnorm=4.0V | |
| VRTC | I/O | Current input for RTC when the battery is not supplied for the system.<br>Current output for backup battery when the main battery is present and the backup battery is in low voltage state. | Vmax=3.15V<br>Vmin=2.0V<br>Vnorm=3.0V<br>Iout(max)= 200uA<br>Iin= 3uA | If the RTC function is enabled, a battery or capacitor should be connected to the VRTC pin. Otherwise the VRTC pin should be keep open. |
| VCHG | I | Voltage input for the charge circuit, as the signal for | Vmax=7.5V<br>Vmin=4.5V | If unused keep open. |

| | | | | |
|---|---|---|---|---|
| | | detecting the charger inserting。 | Vnorm=5.0V | |
| GND | | Ground | | |
| **Power on or power off** | | | | |
| PIN NAME | I/O | DESCRIPTION | DC CHARACTERISTICS | |
| PWRKEY | I | Power on/off the system. | VILmax=1.2V<br>VIHmin=2.6V<br>VIHmax=3.3V<br>VILmin= 0V | No need an external pull-up resistor. |
| **Audio interfaces** | | | | |
| PIN NAME | I/O | DESCRIPTION | DC CHARACTERISTICS | COMMENT |
| MIC1P<br>MIC1N | I | Positive and negative voiceband input | Audio DC Characteristics refer to chapter 3.10 | If unused keep open. |
| MIC2P<br>MIC2N | I | Auxiliary positive and negative voiceband input | | If unused keep open. |
| SPK1P<br>SPK1N | O | Positive and negative voiceband output | | If unused keep open. |
| SPK2P<br>SPK2N | O | Auxiliary positive and negative voiceband output | | If unused keep open. |
| AGND | | Analog ground | | Separate ground connection for external audio circuits.<br>If unused keep open. |
| **GERNERAL PURPOSE input/output** | | | | |
| PIN NAME | I/O | DESCRIPTION | DC CHARACTERISTICS | COMMENT |
| STATUS | O | Indicate working status | VILmax=0.4V<br>VIHmin=2.4V<br>VILmin= 0V<br>VIHmax= 2.95<br>VOHmin= 2.7V<br>VOLmax=0.1V<br>VOHmax= 2.95V<br>VOLmin= 0V | If unused keep open |
| NETLIGHT | O | Indicate net status | | If unused keep open |
| DISP_DATA | I/O | Display interface | | If unused keep open |
| DISP _CLK | O | | | |
| DISP _CS | O | | | |
| DISP _D/C | O | | | |
| GPO1 | O | Normal Output Port | | If unused keep open |
| KBR0 | I/O | Normal Output/Input Port | | |
| **Serial port** | | | | |

| PIN NAME | I/O | DESCRIPTION | DC CHARACTERISTICS | COMMENT |
|---|---|---|---|---|
| RXD | I | Receive data | VILmax=0.4V<br>VIHmin=2.4V<br>VILmin= 0V<br>VIHmax= 3V<br>VOHmin= 2.7V<br>VOLmax=0.1V<br>VOHmax= 3V<br>VOLmin= 0V | 1.DTR Pin has been pulled up.<br>2.RXD should be pulled up to 3V through a 10k resistor, if unused.<br>3. Other pin unused keep open. |
| TXD | O | Transmit data | | |
| RTS | I | Request to send | | |
| CTS | O | Clear to send | | |
| RI | O | Ring indicator | | |
| DCD | O | Data carry detect | | |
| DTR | I | Data terminal Ready | | |

**Debug interface**

| PIN NAME | I/O | DESCRIPTION | DC CHARACTERISTICS | COMMENT |
|---|---|---|---|---|
| DBG_TXD | O | Serial interface for debugging and firmware upgrade | VILmax=0.4V<br>VIHmin=2.4V<br>VILmin= 0V<br>VIHmax= 3V<br>VOHmin= 2.7V<br>VOLmax=0.1V<br>VOHmax= 3V<br>VOLmin= 0V | If unused keep open. |
| DBG_RXD | I | | | |

**SIM interface**

| PIN NAME | I/O | DESCRIPTION | DC CHARACTERISTICS | COMMENT |
|---|---|---|---|---|
| SIM_VDD | O | Voltage supply for SIM card | The voltage can be select by software automatically either 1.8V or 3V | |
| SIM_DATA | I/O | SIM data input/output | VILmax=0.15 *SIM_VDD<br>VIHmin=0.85*SIM_VDD<br>VILmin= 0V<br>VIHmax= SIM_VDD<br>VOHmin= SIM_VDD-0.1V<br>VOLmax=0.1V<br>VOHmax= SIM_VDD<br>VOLmin= 0V | All signals of SIM interface are protected against ESD with a TVS diode array. |
| SIM_CLK | O | SIM clock | | |
| SIM_RST | O | SIM reset | | |

**ADC**

| PIN NAME | I/O | DESCRIPTION | DC CHARACTERISTICS | COMMENT |
|---|---|---|---|---|
| ADC0 | I | General purpose analog to digital converter. | Input voltage range: 0V ~ 2.8V | If unused keep open |
| TEMP_BAT | I | For measure the battery temperature | | If unused keep open. |

**Pulse Width Modulation**

| PIN NAME | I/O | DESCRIPTION | DC CHARACTERISTICS | COMMENT |
|---|---|---|---|---|

| | | | | |
|---|---|---|---|---|
| PWM | O | PWM Output | VOHmin= 2.7V<br>VOLmax=0.1V<br>VOHmax= 3V<br>VOLmin= 0V | If unused keep open |

## 3.2 Operating Modes

The table below briefly summarizes the various operating modes referred to in the following chapters.

**Table6: Overview of operating modes**

| Mode | Function | |
|---|---|---|
| Normal operation | GSM/GPRS SLEEP | Module will automatically go into SLEEP mode if DTR is set to high level and there is no on air and no hardware interrupt (such as GPIO interrupt or data on serial port).<br>In this case, the current consumption of module will reduce to the minimal level.<br>In SLEEP mode, the module can still receive paging message and SMS from the system normally. |
| | GSM IDLE | Software is active. Module has registered to the GSM network, and the module is ready to send and receive. |
| | GSM TALK | Connection between two subscribers is in progress. In this case, the power consumption depends on network settings such as DTX off/on, FR/EFR/HR, hopping sequences, antenna. |
| | GPRS STANDBY | Module is ready for GPRS data transfer, but no data is currently sent or received. In this case, power consumption depends on network settings and GPRS configuration. |
| | GPRS DATA | There is GPRS data transfer (PPP or TCP or UDP) in progress. In this case, power consumption is related with network settings (e.g. power control level), uplink / downlink data rates and GPRS configuration (e.g. used multi-slot settings). |
| POWER DOWN | Normal shutdown by sending the “AT+CPOWD=1” command or using the PWRKEY. The power management ASIC disconnects the power supply from the baseband part of the module, and only the power supply for the RTC is remained. Software is not active. The serial port is not accessible. Operating voltage (connected to VBAT) remains applied. | |
| Minimum functionality mode (without remove power supply) | Use the “AT+CFUN” command can set the module to a minimum functionality mode without remove the power supply. In this case, the RF part of the module will not work or the SIM card will not be accessible, or both RF part and SIM card will be closed, and the serial port is still accessible. The power consumption in this case is very low. | |
| Charge-only | Charge-only mode means: charging when power down. In this mode, the module can not be | |

| | |
|---|---|
| mode | registered to GSM network and only limited AT commands can be accessible, the following way will enter Charge-only mode:<br>● From POWER DOWN mode: Connect charger to the module's VCHG Pin and Battery connect VBAT Pin while SIM900D is power down.<br>● From Normal mode: Connect charger to the module's VCHG Pin and Battery connect VBAT Pin, then power down the module by "AT+CPOWD" |
| Charge mode during normal operation | Start charging while the module is in normal mode including: SLEEP, IDLE, TALK, GPRS IDLE and GPRS DATA. |

## 3.3 Power Supply

The power supply of SIM900D is from a single voltage source of VBAT= 3.4V...4.5V. In some case, the ripple in a transmitting burst may cause voltage drops when current consumption rises to typical peaks of 2A. So the power supply must be able to provide sufficient current up to 2A.

For the VBAT input, a local bypass capacitor is recommended. A capacitor (about 100 µF, low ESR) is recommended. Multi-layer ceramic chip (MLCC) capacitors can provide the best combination of low ESR and small size but may not be cost effective. A lower cost choice may be a 100 µF tantalum capacitor (low ESR) with a small (0.1µF to 1µF) ceramic in parallel, which is illustrated as following figure. The capacitors should be placed as close as possible to the SIM900D VBAT pins. The following figure is the recommended circuit.

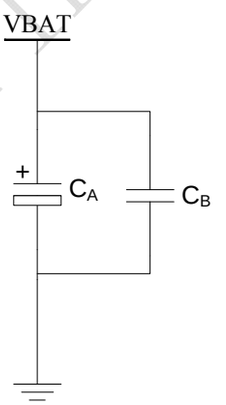


**Figure3: Reference circuit of the VBAT input**

The circuit design of the power supply depends strongly upon the power source where this power is drained. The following figure is the reference design of +5V input source power supply. The designed output for the power supply is 4.1V, thus a linear regulator can be used. If there's a big difference between the input source and the desired output (VBAT), a switching converter power supply will be preferable because of its better efficiency especially with the 2A peak current in burst mode of the module.

The single 3.6V Li-Ion cell battery type can be connected to the power supply of the SIM900D VBAT directly. But the Ni_Cd or Ni_MH battery types must be used carefully, since their maximum voltage can rise over the absolute maximum voltage for the module and damage it.

SIMCOM CONFIDENTIAL FILE

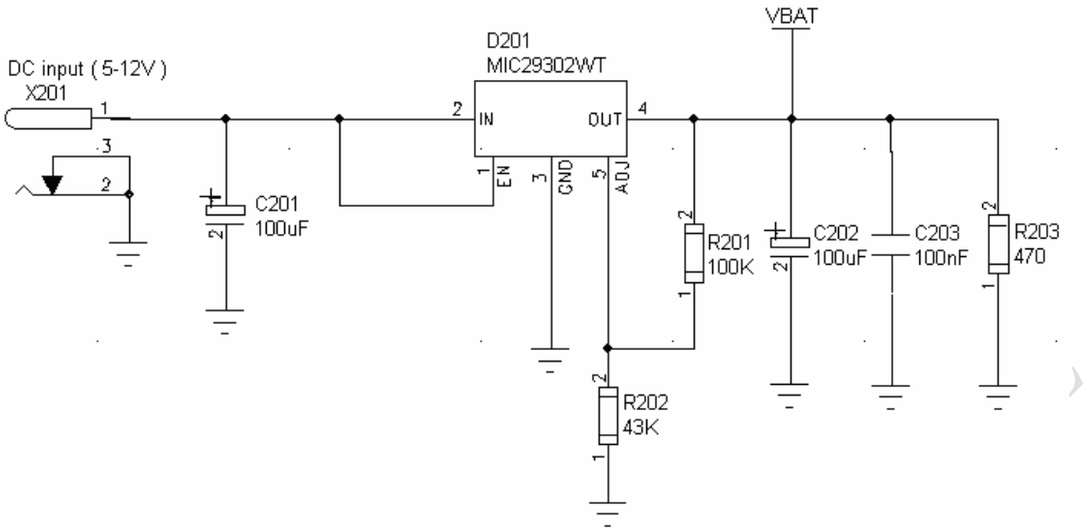


**Figure4: Reference circuit of the source power supply input**

The following figure is the VBAT voltage drop at the maximum power transmit phase, the test condition is VBAT=4.0V, VBAT maximum output current =2A, $C_A$=100μF tantalum capacitor (ESR=0.7Ω) and $C_B$=1μF.

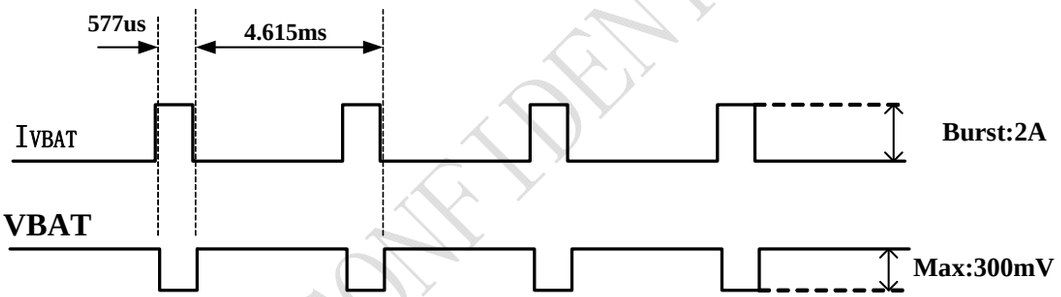


**Figure5: VBAT voltage drop during transmit burst**

### 3.3.1 Power Supply Pins

Two VBAT pins are dedicated to connect the supply voltage and nine GND pins are dedicated to connect ground. VRTC pin can be used to back up the RTC.

### 3.3.2 Minimizing Power Losses

When designing the power supply for your application please pay specific attention to power losses. Ensure that the input voltage VBAT never drops below 3.4V even in a transmit burst where current consumption can rise to typical peaks of 2A. If the power voltage drops below 3.4V, the module may be switched off. The PCB traces from the VBAT pins to the power source must be wide enough to decrease heat energy in the transmitting burst mode.

SIMCOM CONFIDENTIAL

### 3.3.3 Monitoring Power Supply

To monitor the supply voltage, user can use the "AT+CBC" command which include three parameters: charging state, voltage percentage and voltage value (in mV). It returns charge state，the battery voltage 1-100 percent of capacity and actual value measured at VBAT and GND.

The voltage is continuously measured at intervals depending on the operating mode. The displayed voltage (in mV) is averaged over the last measuring period before the AT+CBC command is executed.

For details please refer to ***document [1]***

## 3.4 Power Up and Power Down Scenarios

In general, be sure not to turn on SIM900D while it is beyond the safety limits of voltage and temperature stated in Chapter 3.4.2. SIM900D would immediately switch off after having started and detected these inappropriate conditions. In extreme cases this can cause permanent damage to the module.

### 3.4.1 Turn on SIM900D

SIM900D can be turned on by two ways, which are described in following chapters:

- Via PWRKEY pin: starts normal operating mode *(please refer to chapter 3.4.1.1)*;
- Via VCHG Pin: starts Charge-only mode (see chapter 3.4.1.2);

***Note: The AT command must be set after the SIM900D is power on and Unsolicited Result Code "RDY" is received from the serial port. However if the SIM900D is set autobauding, the serial port will receive nothing. The AT commands can be set after the SIM900D is power on. Use AT+IPR=x to set a fixed baud rate and save the configuration to non-volatile flash memory. After the configuration is saved as fixed baud rate, the Code "RDY" should be received from the serial port all the time that the SIM900D is power on. Please refer to the chapter AT+IPR in document [1].***

#### 3.4.1.1 Turn on SIM900D Using the PWRKEY Pin (Power on)

The SIM900D can be turned on by driving the PWRKEY to a low level voltage for a short time, then release. This pin has pulled up to 3V in the module. The simple circuit illustrates as the following figures.

SIMCOM CONFIDENTIAL FILE

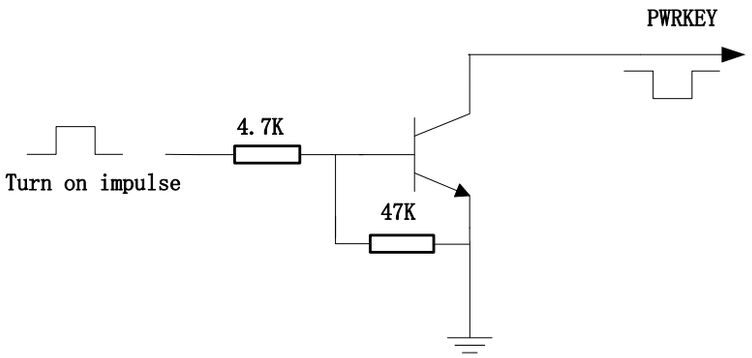


**Figure6: Turn on SIM900D using driving circuit**

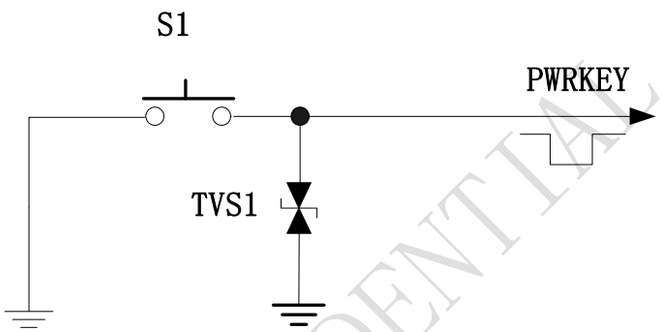


**Figure7: Turn on SIM900D using button**

The power on scenarios illustrates as following figure.

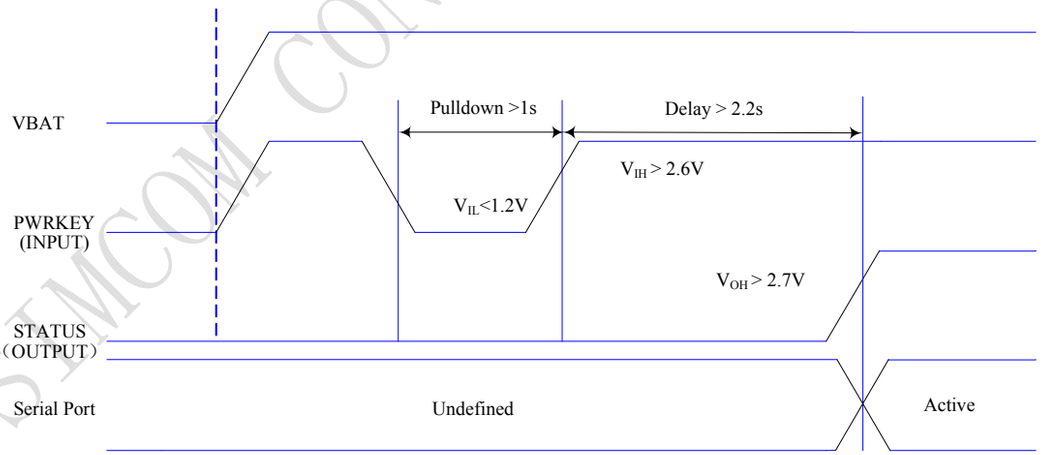


**Figure8: Timing of turn on system using PWRKEY**

When power on procedure completes, the SIM900D will send out following result code to indicate the module is ready to operate when set as fixed baud rate.

***RDY***

This result code does not appear when autobauding is active.

SIMCOM CONFIDENTIAL FILE

#### 3.4.1.2 Turn on the SIM900D using the VCHG signal

As described in chapter 3.4, charger can be connected to SIM900D's VCHG Pin regardless of the module's operating mode.

If the charger is connected to the module's VCHG Pin while SIM900D is in POWER DOWN mode, SIM900D will go into the Charge-only Mode (Off and charging). In this mode, the module will not register to network, and only a few AT commands can work in this mode. For detailed information please refers to chapter 3.5.

When module is powered on using the VCHG signal, SIM900D sends out result code as following when fixed baud rate:

***RDY***

***CHARGE-ONLY MODE***

In Charge-only mode, by driving the PWRKEY to a low level voltage for period time (Please refer to the power on scenarios in 3.4), SIM900D will power up and go into charge mode (charging in normal mode), all operation and AT commands can be available. In this case, SIM900D will send out result code as following:

***From CHARGE-ONLY MODE to NORMAL MODE***

### 3.4.2 Turn Off SIM900D

Following ways can be used to turn off the SIM900D:

- Normal power down procedure: Turn off SIM900D using the PWRKEY pin
- Normal power down procedure: Turn off SIM900D using AT command
- Over-voltage or under-voltage automatic shutdown: Take effect if over-voltage or under-voltage is detected
- Over-temperature or under-temperature automatic shutdown: Take effect if over-temperature or under-temperature is detected.

#### 3.4.2.1 Turn Off SIM900D Using the PWRKEY Pin (Power down)

The SIM900D can be turned off by driving the PWRKEY to a low level voltage for a short time and then release. Please refer to the turn on circuit. The power down scenario illustrates as following figure.

This procedure lets the module log off from the network and allows the software to enter into a secure state and save data before completely disconnecting the power supply.

Before the completion of the switching off procedure the module will send out result code:

***NORMAL POWER DOWN***

After this moment, the AT commands can't be executed. The module enters the POWER DOWN mode, only the RTC is still active. POWER DOWN can also be indicated by STATUS pin, which is a low level voltage in this mode.

SIMCOM CONFIDENTIAL FILE

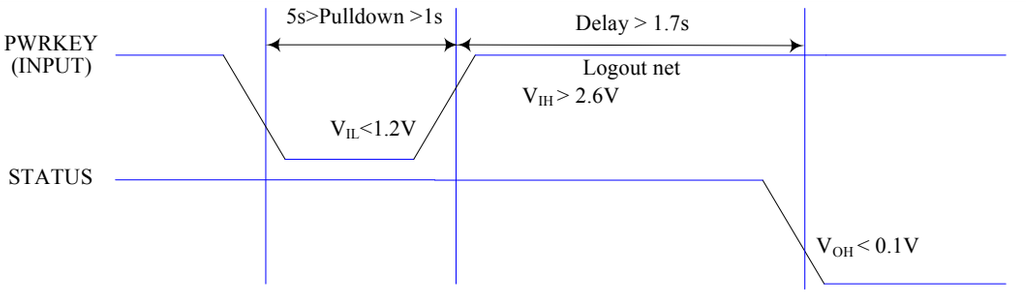


**Figure9: Timing of turn off system using PWRKEY**

### 3.4.2.2 Turn Off SIM900D Using AT Command

The SIM900D can use the AT command "AT+CPOWD=1" to turn off the module. This command lets the module log off from the network and allows the module to enter into a secure state and save data before completely disconnecting the power supply.

Before the completion of the switching off procedure the module will send out result code:

***NORMAL POWER DOWN***

After this moment, the AT commands can't be executed. The module enters the POWER DOWN mode, only the RTC is still active. POWER DOWN can also be indicated by STATUS pin, which is a low level voltage in this mode.

Please refer to ***document [1]*** for detail about the AT command of "AT+CPOWD".

### 3.4.2.3 Over-voltage or Under-voltage Automatic Shutdown

The module will constantly monitor the voltage applied on the VBAT. If the voltage ≤ 3.5V, the following URC will be presented:

***UNDER-VOLTAGE WARNNING***

If the voltage ≥ 4.5V, the following URC will be presented:

***OVER-VOLTAGE WARNNING***

The uncritical voltage range is 3.4V to 4.6V. If the voltage > 4.6V or < 3.4V, the module will be automatic shutdown soon.

If the voltage < 3.4V, the following URC will be presented:

***UNDER-VOLTAGE POWER DOWN***

If the voltage > 4.6V, the following URC will be presented:

***OVER-VOLTAGE POWER DOWN***

AT commands can't be executed. The module logs off from network and enters POWER DOWN mode, and only the RTC is still active. POWER DOWN can also be indicated by STATUS pin, which is a low level voltage in this mode.

### 3.4.2.4 Over-temperature or Under-temperature Automatic Shutdown

The module will constantly monitor the temperature of the module, if the temperature > +80℃, the following

SIMCOM CONFIDENTIAL FILE

URC will be presented:

***+CMTE:1***

If the temperature < -30℃, the following URC will be presented:

***+CMTE:-1***

The uncritical temperature range is -40℃ to +85℃. If the temperature >+ 85℃ or < -40℃, the module will be automatic shutdown soon.

If the temperature > +85℃, the following URC will be presented:

***+CMTE:2***

If the temperature < -40℃, the following URC will be presented:

***+CMTE:-2***

After this moment, the AT commands can't be executed. The module logs off from network and enters POWER DOWN mode, and only the RTC is still active. POWER DOWN can also be indicated by STATUS pin, which is a low level voltage in this mode.

To monitor the temperature, it can be used the "AT+CMTE" command to read the temperature when the module is power on.

For details please refer to ***document [1]***

### 3.4.3 Restart SIM900D Using the PWRKEY Pin

User can restart SIM900D by driving the PWRKEY to a low level voltage for a short time and then release, the same as turning on SIM900D using the PWRKEY pin. Before restarting the SIM900D, it need delay at least 500ms from detecting the STATUS low level on. The restarting scenario illustrates as the following figure.

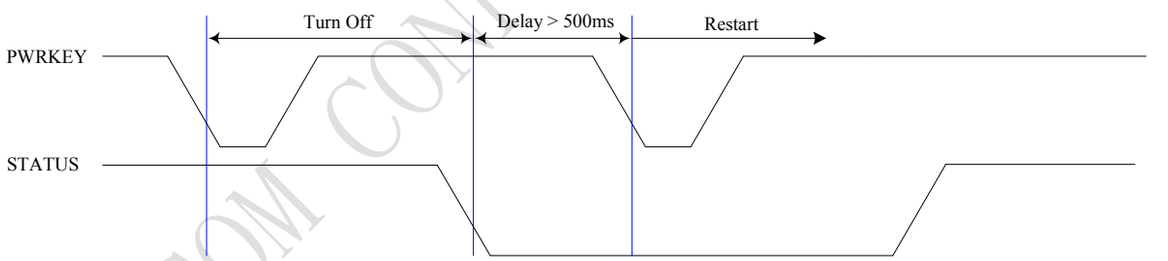


**Figure10: Timing of restart system**

## 3.5 Charging interface

SIM900D has integrated a charging circuit inside the module for Li-Ion batteries charging control, which make it very convenient for applications to manage their battery charging. A common connection is shown in the following figure:

SIMCOM CONFIDENTIAL FILE

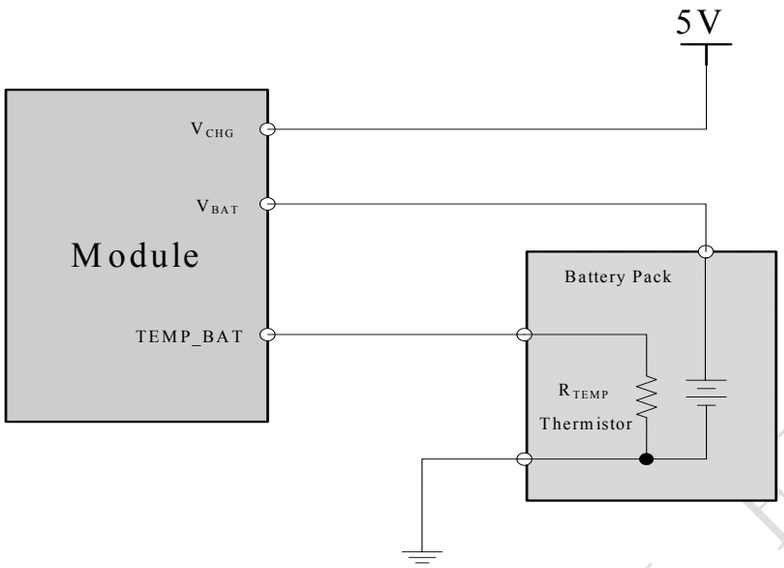


**Figure11: Battery charger and pack**

The function of detecting the temperature of battery should be supported by the software in the module. It's a customization function. The $R_{TEMP}$ is a NTC thermistor. It's recommended to use NCP15XH103F03RC from MURATA. The impedance of the NTC thermistor is 10Kohm at 25℃. Please refer to the above figure for the reference circuit.

### 3.5.1 Battery pack characteristics

SIM900D has optimized the charging algorithm for the Li-Ion battery that meets the characteristics listed below. To use SIM900D's charging algorithm properly, it is recommended that the battery pack you integrated into your application is compliant with these specifications. The battery pack compliant with these specifications is also important for the AT command "AT+CBC" to monitor the voltage of battery, or the "AT+CBC" may return incorrect battery capacity values.

- The maximum charging voltage of the Li-Ion battery pack is 4.2V and the recommended capacity is 1100mAh. If the Battery packs with a capacity more than 1100 mAh, it will cost more time for charging.
- The pack should have a protection circuit to avoid overcharging, deep discharging and over-current. This circuit should be insensitive to pulsed current.
- On the SIM900D, the build-in circuit of SIM900D's power management chipset monitors the supply voltage constantly. Once the Under-voltage is detected, the SIM900D will be power down automatically. Under-voltage thresholds are specific to the battery pack.
- The internal resistance of the battery and the protection circuit should be as low as possible. It is recommended not to exceed 200mΩ.
- The battery pack must be protected from reverse pole connection.

SIMCOM CONFIDENTIAL FILE

### 3.5.2 Recommended battery pack

Following is the specification of recommended battery pack:

**Table7: Specification of recommended battery pack**

| Items | Description |
|---|---|
| Battery type | Li-ion |
| Manufacturer | Jiade Energy Technology |
| Normal voltage | 3.7V |
| Capacity | NORMAL 1100mAh |
| Charge Voltage | 4.200±0.050V |
| Max Charge Current | 1.0C |
| Charge Method | CC / CV (Constant Current / Constant Voltage) |
| Max Discharge Current | 1.0C (for continuous discharging mode) |
| Discharge Cut-off Voltage | 3.0V/ cell |
| Internal resistance | Initial≤130mΩ |

### 3.5.3 Implemented charging technique

SIM900D has battery charging function. There are three pins related with the battery charging function: VCHG, VBAT and TEMP_BAT/ADC0 pins. The VCHG Pin is driven by an external voltage, system can use this Pin to detect a charger supply and provide most charging current through SIM900D module to battery when charging is in fast charge state. The VBAT give out charging current from SIM900D module to external battery. TEMP_BAT Pin is for user to measure the battery temperature. Just let this Pin open if battery temperature measuring is not your concern.

So it is very simple to implement charging technique, It needs connect the charger to the VCHG Pin and connect the battery to the VBAT Pin.
The SIM900D detect charger supply and the battery is present, battery charging will happen. If there is no charger supply or no battery present the charging will not be enabled.

Normally, there are three main states in whole charging procedure.

- DDLO charge (Pull-up mode) and UVLO charge (Per-charge mode);
- Fast charge;
- Trickle charge;

**DDLO charge and UVLO charge:**
DDLO (deep discharge lock out) is the state of battery when its voltage is under 1.5V. And UVLO (under voltage lock out) means the battery voltage less than 3.3V and more than 1.5V. The battery is not suitable for fast charge when its condition is DDLO or UVLO. The SIM900D provides a small constant current to the battery when the

SIMCOM CONFIDENTIAL

battery is between DDLO and UVLO. In DDLO charge, SIM900D gives out 1mA current to the battery. And in UVLO charge, SIM900D provides about less than 200mA current to the battery.

DDLO charge terminated when the battery voltage reaches 1.5V. UVLO charge terminated when the battery voltage is up to 3.3V. Both DDLO and UVLO charge are controlled by the SIM900D hardware only.

**Fast charge:**

If there is a charger supply and battery present and the battery is not in DDLO and UVLO, SIM900D will enter fast charge state. Fast charge is controlled by the software. Fast charge delivers a strong and constant current (about 550mA) through VBAT Pin to the battery until battery voltage reach 4.2V.

**Trickle charge:**

After fast charging, the battery voltage is close to the whole battery capacity, trickle charge begins. In this state, the SIM900D charges the battery under constant voltage.

### 3.5.4 Operating modes during charging

The battery can be charged during various operating mode. That means that when the GSM engine is in Normal mode (SLEEP, IDLE, TALK, GPRS IDLE or GPRS DATA mode), charging can be in progress while SIM900D remains operational (In this case the voltage supply should be sufficient). Here it's named Charging in Normal mode as Charge mode.

If the charger is connected to the module's VCHG Pin and the battery is connected to the VBAT Pin while SIM900D is in POWER DOWN mode, SIM900D will go into the Charge-only Mode (Off and charging). The following table gives the difference between Charge mode and Charge-only mode：

**Table8: operating modes**

| | How to activate mode | Features |
|---|---|---|
| **Charge Mode** | Connect charger to module's VCHG Pin and connect battery to VBAT Pin of module while SIM900D is in Normal operating mode, including:<br>IDLE, TALK mode; SLEEP mode etc; | ● GSM remains operational and registered GSM network while charging is in progress;<br>● The serial interfaces are available in IDLE, TALK mode, the AT command set can be used fully in this case;<br>In SLEEP mode, the serial interfaces are not available, once the serial port is connected and there is data in transfer. Then SIM900D will exit the SLEEP mode. |

CONFIDENTIAL FILE

| | | |
|---|---|---|
| **Charge-only Mode** | Connect charger to module's VCHG Pin while SIM900D is in POWER DOWN mode.<br><br>IMPORTANT: Here Charge-only mode is charging when power down it means that not all software tasks are running. | ● Battery can be charged when GSM engine is not registered to GSM network;<br>● Only a few AT commands is available as listed below. |

***Note: VBAT can not provide much more than 5mA current while SIM900D module is during the DDLO charge state. In other words it is strongly recommended that VBAT should not be the main power supply in the application subsystem while SIM900D module is during the DDLO charge state.***

**Table9: AT Command usually used in Charge-only mode**

| AT command | Function |
|---|---|
| AT+CCLK | Set data and time of RTC |
| AT+CPOWD | Power down |
| AT+CBC | Indicated charge state and voltage |
| AT+CFUN | Start or close the protocol<br>Set AT command**" AT+CFUN =1**",module can be transferred from Charge-only mode to Charging in normal mode, In Charge-only mode, the default value is 0 |

### 3.5.5 Charger requirements

Following is the requirements of charger for SIM900D.

- Simple transformer power plug
- Output voltage: 5.0V-6V
- Minimum supply current : 750mA
- A 10V peak voltage is allowed for maximum 1ms when charging current is switched off.
- A 1.6A peak current is allowed for maximum 1ms when charging current is switched on

## 3.6 Power Saving

There are two methods for the module to enter into low current consumption status. "AT+CFUN" is used to set module into minimum functionality mode and DTR hardware interface signal can be used to lead system to be in SLEEP mode (or slow clocking mode).

SIMCOM CONFIDENTIAL FILE

### 3.6.1 Minimum Functionality Mode

Minimum functionality mode reduces the functionality of the module to a minimum and, thus, minimizes the current consumption to the lowest level. This mode is set with the "AT+CFUN" command which provides the choice of the functionality levels <fun>=0，1，4

- 0: minimum functionality;
- 1: full functionality (default);
- 4: disable phone both transmit and receive RF circuits;

If SIM900D has been set to minimum functionality by "AT+CFUN=0", the RF function and SIM card function will be closed. In this case, the serial port is still accessible, but all AT commands correlative with RF function or SIM card function will not be accessible.
If SIM900D has been set by "AT+CFUN=4", the RF function will be closed, the serial port is still active. In this case all AT commands correlative with RF function will not be accessible.
After SIM900D has been set by "AT+CFUN=0" or "AT+CFUN=4", it can return to full functionality by "AT+CFUN=1".
For detailed information about "AT+CFUN", please refer to ***document [1].***

### 3.6.2 Sleep Mode (Slow Clock Mode)

The SIM900D can be controlled to enter or exit the SLEEP mode in customer applications through DTR signal. When DTR is in high level，and there is no on air and hardware interrupt (such as GPIO interrupt or data on serial port), SIM900D will enter SLEEP mode automatically. In this mode, SIM900D can still receive paging or SMS from network but the serial port is not accessible.

***Note: For SIM900D, it requests to set AT command "AT+CSCLK=1" to enable the sleep mode; the default value is 0, that can't make the module enter sleep mode. For more details please refer to our AT command list.***

### 3.6.3 Wake Up SIM900D from SLEEP Mode

When SIM900D is in SLEEP mode, the following methods can wake up the module.

- Enable DTR pin to wake up SIM900D.
  If DTR pin is pulled down to a low level，this signal will wake up SIM900D from power saving mode. The serial port will be active after DTR changed to low level for about 50ms.
- Receiving a voice or data call from network to wake up SIM900D.
- Receiving a SMS from network to wake up SIM900D.

## 3.7 Summary of State Transitions (except SLEEP mode)

The following figure shows how to proceed from one mode to another.

SIMCOM CONFIDENTIAL FILE

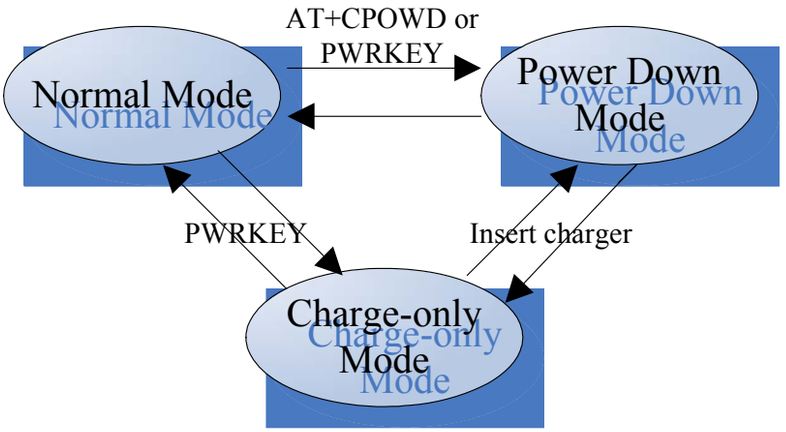


**Figure12: State Transition**

## 3.8 RTC Backup

The RTC (Real Time Clock) power supply of module can be provided by an external capacitor or a battery (rechargeable or non-chargeable) through the VRTC.

***Note: If the RTC function is enabled, a battery or capacitor should be connected with the VRTC pin. Otherwise the VRTC pin can be keep open.***

The following figures show various sample circuits for RTC backup.

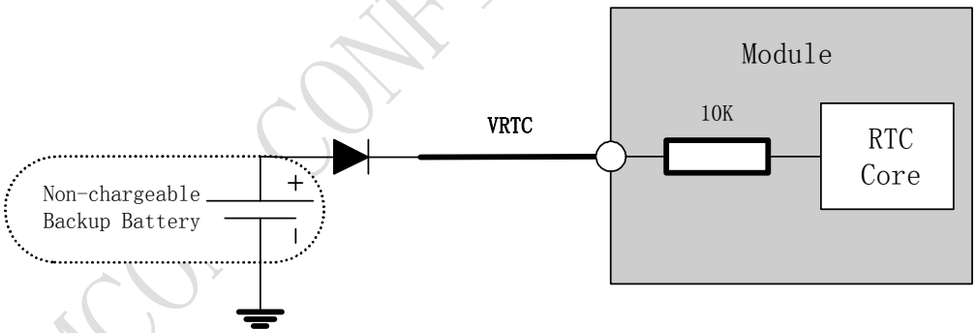


**Figure13: RTC supply from non-chargeable battery**

SIMCOM CONFIDENTIAL FILE

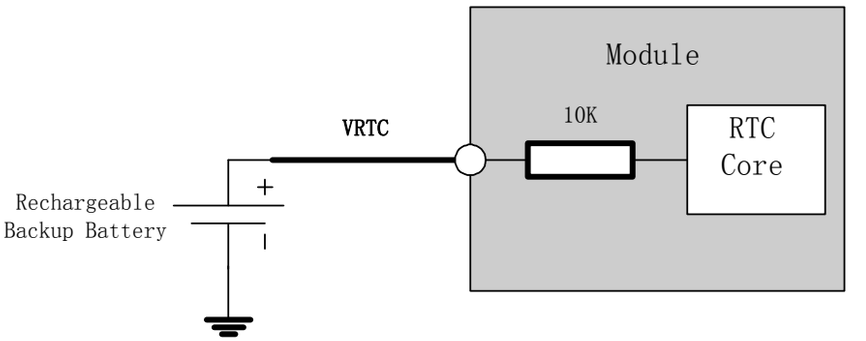


**Figure14: RTC supply from rechargeable battery**

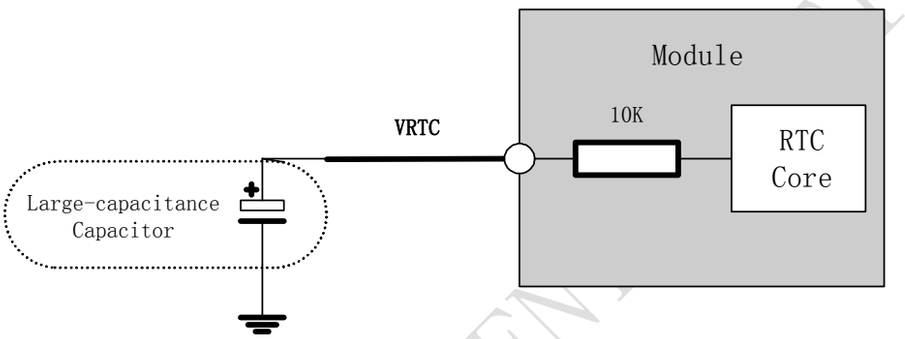


**Figure15: RTC supply from capacitor**

- **Li-battery backup**

Coin-type Rechargeable Capacitor such as XH414H-IV01E form Seiko can be used.

Typical charge curves for each cell type are shown in following figures. Note that the rechargeable Lithium type coin cells generally come pre-charged from the vendor.

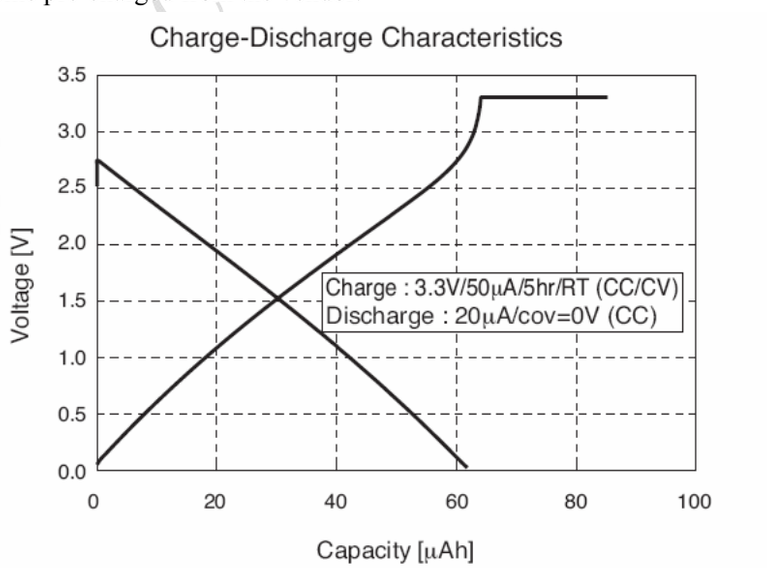


**Figure16: Seiko XH414H-IV01E Charge Characteristic**

## 3.9 Serial Interfaces

**Table10: Pin definition of the serial interfaces**

| | Name | Pin | Function |
|---|---|---|---|
| Serial port | DTR | 43 | Data terminal ready |
| | RI | 11 | Ring indicator |
| | DCD | 42 | Data carrier detection |
| | CTS | 45 | Clear to send |
| | RTS | 44 | Request to send |
| | TXD | 4 | Transmit data |
| | RXD | 3 | Receive data |
| Debug port | DBG_RXD | 1 | Receive data |
| | DBG_TXD | 2 | Transmit data |

SIM900D provides two unbalanced asynchronous serial ports. One is the serial port and the other is the debug port. The GSM module is designed as a DCE (Data Communication Equipment), following the traditional DCE-DTE (Data Terminal Equipment) connection. The module and the client (DTE) are connected through the following signal (as following figure shows). Autobauding supports baud rate from 1200bps to 57600bps.
When the RXD, TXD, DBG_RXD, DBU_TXD are used, it should be pull up 10k to 3V.
Serial port

- TXD: Transmit Data
- RXD: Receive Data

Debug port

- DBG_TXD: Transmit Data
- DBG_RXD: Receive Data

The logic levels are described in following table.

***NOTE: The RXD should be pulled up to 3V through a 10k resistor, if unused.***

**Table11: Logic levels of the serial port and debug port**

| Parameter | Min | Max | Unit |
|---|---|---|---|
| $V_{IL}$ | 0 | 0.4 | V |
| $V_{IH}$ | 2.4 | 3 | V |
| $V_{OL}$ | 0 | 0.1 | V |
| $V_{OH}$ | 2.7 | 3 | V |

SIMCOM CONFIDENTIAL

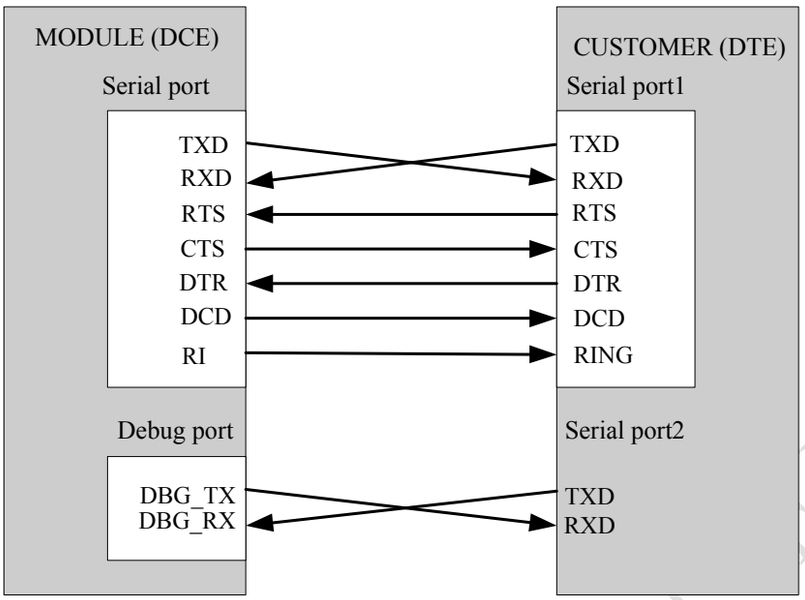


**Figure17: Connection of the serial interfaces**

### 3.9.1 Function of serial port & debug port supporting

Serial port

- Modem device.
- Contains data lines TXD and RXD, State lines RTS and CTS, Control lines DTR, DCD and RI.
- Serial port can be used for CSD FAX, GPRS service and send AT command of controlling module. Also serial port can be used for multiplexing function. SIM900D supports only basic mode of multiplexing so far.
- Serial port supports the communication rates as following:
  1200,2400, 4800, 9600, 19200, 38400, 57600, 115200bps
- Autobauding supports baud rates as following:
  1200, 2400, 4800, 9600, 19200, 38400, and 57600bps, the default setting is autobauding.

Autobauding allows the GSM engine to automatically detect the baud rate configured in the host application. The serial port of the GSM engine supports autobauding for the following baud rates: 1200, 2400, 4800, 9600, 19200, 38400, 57600bps. Factory setting is autobauding enabled. This gives you the flexibility to put the GSM engine into operation no matter what baud rate your host application is configured to. To take advantage of autobauding mode, specific attention should be paid to the following requirements:

**Synchronization between DTE and DCE**:

When DCE powers on with the autobauding enabled, user must first send “A” to synchronize the baud rate. It is recommended to wait 2 to 3 seconds before sending “AT” character. After receiving the “OK” response, DTE and DCE are correctly synchronized. The more information please refer to the AT command “AT+IPR”.

**Restrictions on autobauding operation**

- The serial port has to be operated at 8 data bits, no parity and 1 stop bit (factory setting).
- The Unsolicited Result Codes like "RDY", "+CFUN: 1" and "+CPIN: READY” are not indicated when you

SIMCOM CONFIDENTIAL FILE

start up the ME while autobauding is enabled. This is due to the fact that the new baud rate is not detected unless DTE and DCE are correctly synchronized as described above.

***Note: Can use AT+IPR=x to set a fixed baud rate and save the configuration to non-volatile flash memory. After the configuration is saved as fixed baud rate, the Unsolicited Result Codes like "RDY" should be received from the serial port all the time that the SIM900D is power on.***

Debug port

- Null modem port
- Only contain Data lines TXD and RXD
- Debug Port used for debugging and upgrading firmware. It cannot be used for CSD call, FAX call. And the Debug port can not use multiplexing function. It does not support autobauding function.
- Debug port supports the communication rates is 115200bps

### 3.9.2 Software Upgrade and Software Debug

The DBG_TXD, DBG_RXD and GND must be connected to the IO connector when user need to upgrade software and debug software, the DBG_TXD, DBG_RXD should be used for software upgrade and for software debugging. The TXD and RXD also should be connected to the IO connector, if user wants to send AT command or data stream to SIM900D. The PWRKEY pin is recommended to connect to the IO connector. The user also can add a switch between the PWRKEY and the GND. The PWRKEY should be connected to the GND when SIM900D is upgrading software. Please refer to the following figure.

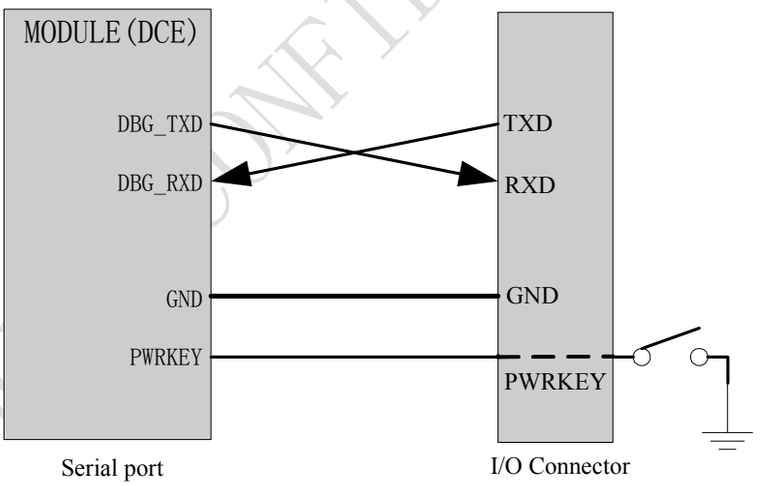


**Figure18: Connection of software upgrade and software debug**

The serial port and the debug port don't support the RS_232 level and it only supports the CMOS level. It should add the level converter IC between the DCE and DTE, if you connect it to the computer. Please refer to the following figure.

SIMCOM CONFIDENTIAL FILE

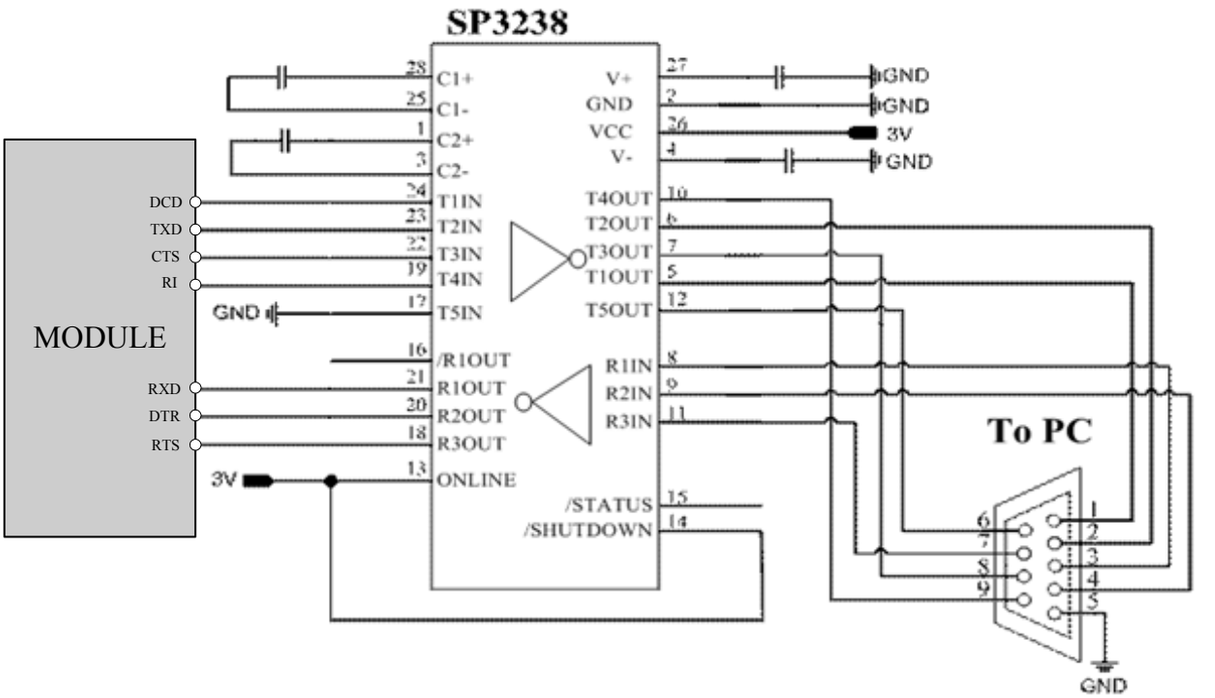


**Figure19: RS232 level converter circuit**

SIMCOM CONFIDENTIAL

## 3.10 Audio Interfaces

**Table12: Pin definition of the Audio interface**

| | Name | Pin | Function |
|---|---|---|---|
| (AIN1/AOUT1) | MIC1P | 21 | Microphone1 input + |
| | MIC1N | 20 | Microphone1 input - |
| | SPK1P | 23 | Audio1 output+ |
| | SPK1N | 24 | Audio1 output- |
| (AIN2/AOUT2) | MIC2P | 18 | Microphone2 input + |
| | MIC2N | 19 | Microphone2 input - |
| | SPK2P | 26 | Audio2 output+ |
| | SPK2N | 25 | Audio2 output- |

The module provides two analog input channels, AIN1 and AIN2, which may be used for both microphone and line inputs. The AIN1 and AIN2 channels are identical. One of the two channels is typically used with a microphone built into a handset. The other channel is typically used with an external microphone or external line input. The module analog input configuration is determined by control register settings and established using analog multiplexers.

For each channels, the “AT+CMIC” can be used to adjust the input gain level of microphone, use AT+SIDET to set the side-tone level. In addition, the “AT+CLVL” can also be used to adjust the output gain level of both receiver and speaker at the same time, use AT+CHFA to activate one of the two audio channels and deactivate the other one.. For more details, please refer to ***document [1].***

It is suggested that you adopt one of the following two matching circuits in order to improve audio performance. The difference audio signals have to be layout according to difference signal layout rules. As show in following figures ***(Note: all components package are 0603.)*** There can be recommended National Company’s LM4890 to adopt an amplifier circuit for audio. Of course it can be selected according to your requirement.

SIMCOM CONFIDENTIAL

### 3.10.1 Speaker Interface Configuration

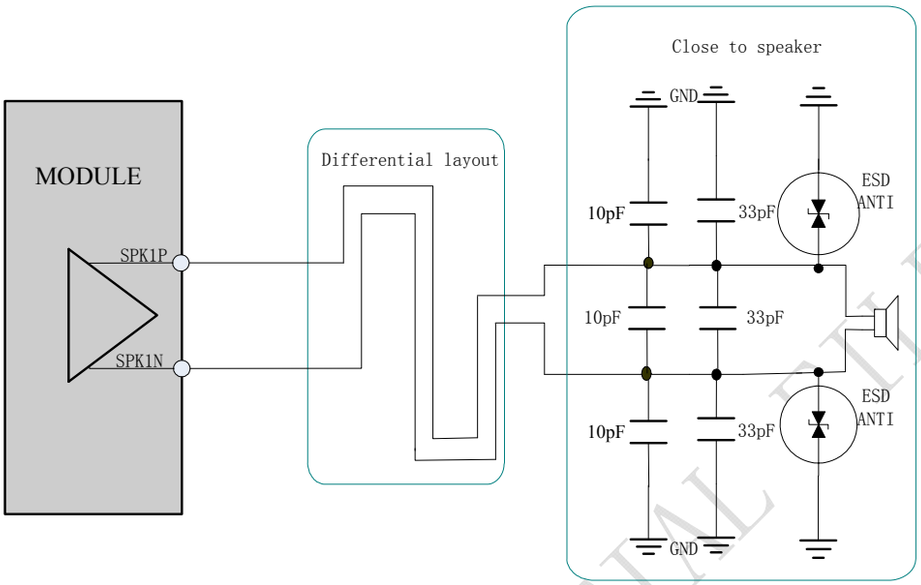


**Figure20: Speaker interface configuration**

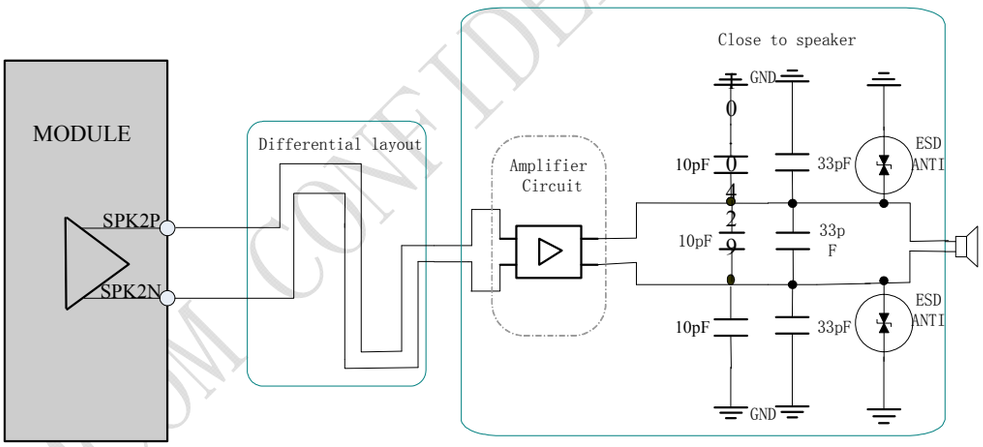


**Figure21: Speaker interface with amplifier configuration**

SIMCOM CONFIDENTIAL FILE

### 3.10.2 Microphone Interfaces Configuration

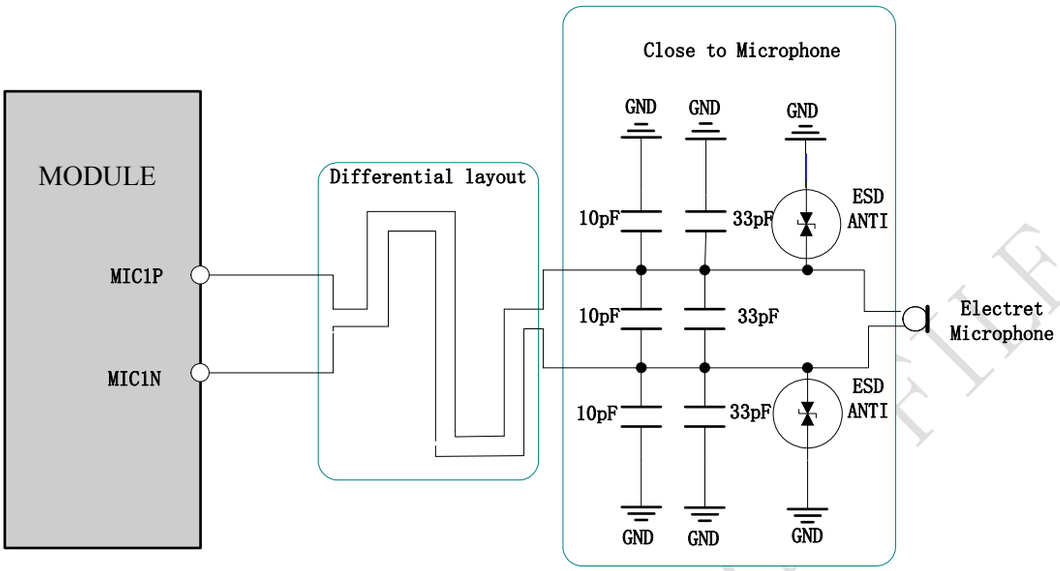


**Figure22: Microphone interface configuration**

### 3.10.3 Earphone Interface Configuration

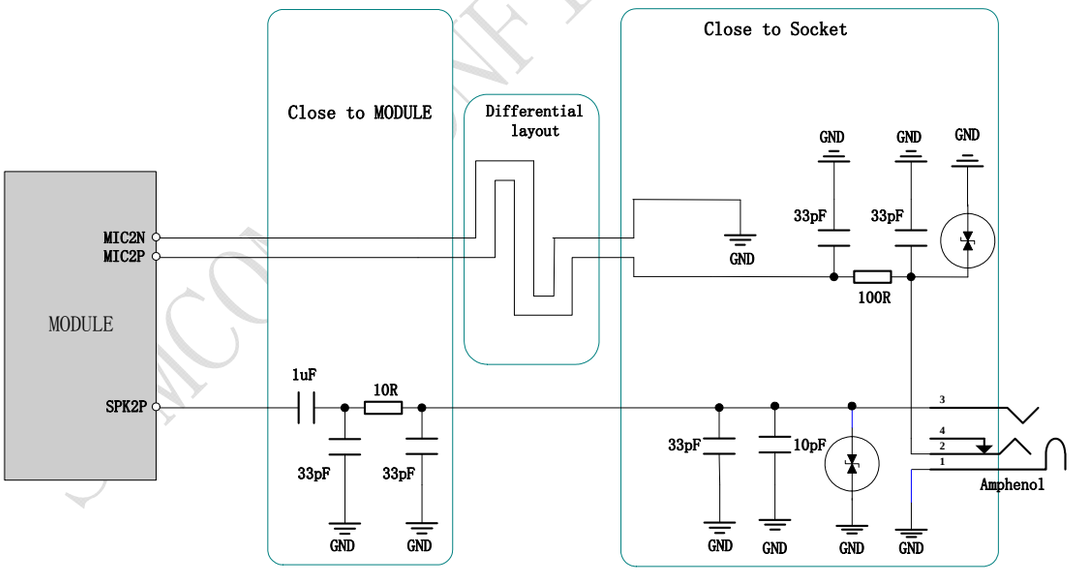


**Figure23: Earphone interface configuration**

### 3.10.4 Referenced Electronic Characteristic

**Table13: MIC Input Characteristics**

| Parameter | | Min | Typ | Max | Unit |
|---|---|---|---|---|---|
| Working Voltage | | 1.2 | 1.5 | 2.0 | V |
| Working Current | | 200 | | 500 | uA |
| External Microphone Load Resistance | | 1.2 | 2.2 | | k Ohms |
| Internal biasing DC Characteristics | | | | 2.5 | V |
| Differential input voltage | THD <1% at F=1KHz; pre-amp gain = 20 dB; PGA gain = 14 dB | | 15.9 | | mVrms |
| | THD <5% at F=1KHz;pre-amp gain = 0 dB; PGA gain = 0 dB | | 740 | | mVrms |

**Table14: Audio Output Characteristics**

| Parameter | Conditions | Min | Typ | Max | Unit |
|---|---|---|---|---|---|
| Normal Output(SPK1P/1N) | load Resistance | 27 | 32 | - | Ohm |
| | Biasing voltage | | 1.4 | | V |
| | Output swing Voltage(single) | | | 1.1V | Vpp |
| | Output swing Voltage(differential) | | | 2.2 | Vpp |
| | RL=32 Ohm THD=0.1% | - | 91 | - | mW |
| | RL=32 Ohm THD=1% | - | 96 | - | mW |
| Normal Output(SPK2P/2N) | load Resistance | 27 | 32 | - | Ohm |
| | Biasing voltage | | 1.4 | | V |
| | Output swing Voltage(single) | | | 1.1V | V |
| | Output swing Voltage(differential) | | | 2.2 | V |

| | | | | | |
|---|---|---|---|---|---|
| | RL=32 Ohm THD=0.1% | - | 91 | - | mW |
| | RL=32 Ohm THD=1% | - | 96 | - | mW |

## 3.11 SIM Card Interface

### 3.11.1 SIM Card Application

That can be use AT Command to get information in SIM card. For more information, please refer to ***document [1].***

The SIM interface supports the functionality of the GSM Phase 1 specification and also supports the functionality of the new GSM Phase 2+ specification for FAST 64 kbps SIM (intended for use with a SIM application Tool-kit).

Both 1.8V and 3.0V SIM Cards are supported.

The SIM interface is powered from an internal regulator in the module having normal voltage 3V. All pins reset as outputs driving low. Logic levels are as described in table

**Table15: Pin definition of the SIM interface**

| Pin Name | Pin Number | Function |
|---|---|---|
| SIM_VDD | 9 | SIM Card Power supply, it can identify automatically the SIM Card power mode，one is 3.0V±10%, another is 1.8V±10%. Current is about 10mA. |
| SIM_DATA | 6 | SIM Card data I/O |
| SIM_CLK | 7 | SIM Card Clock |
| SIM_RST | 8 | SIM Card Reset |

Following is the reference circuit about SIM interface. Recommend an Electro-Static discharge device ST (www.st.com ) ESDA6V1W5 or ON SEMI (www.onsemi.com ) SMF05C for “ESD ANTI”. The 22Ω resistors showed in the following figure should be added in series on the IO line between the module and the SIM card for protecting the SIM I/O port. The pull up resistor (about 15KΩ) on the SIM_DATA line already added in the module. Note that the SIM peripheral circuit should be close to the SIM card socket.

The reference circuit about 6 pins SIM card illustrates as following figure.

SIMCOM CONFIDENTIAL FILE

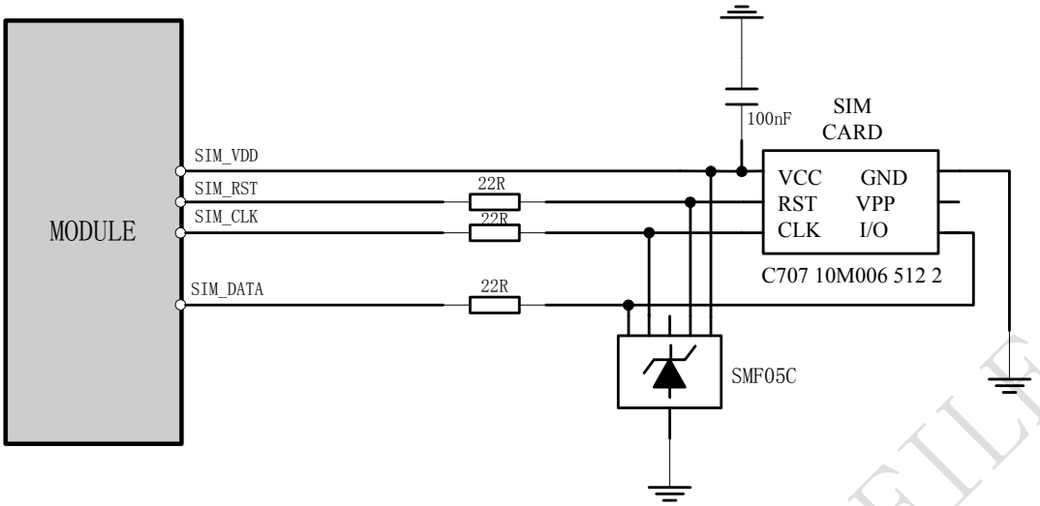


**Figure24: Reference circuit of the 6 pins SIM card**

### 3.11.2 Design Considerations for SIM Card Holder

For 6 pins SIM card holder, that be recommend to use Amphenol C707 10M006 512 2 .User can visit http://www.amphenol.com for more information about the holder.

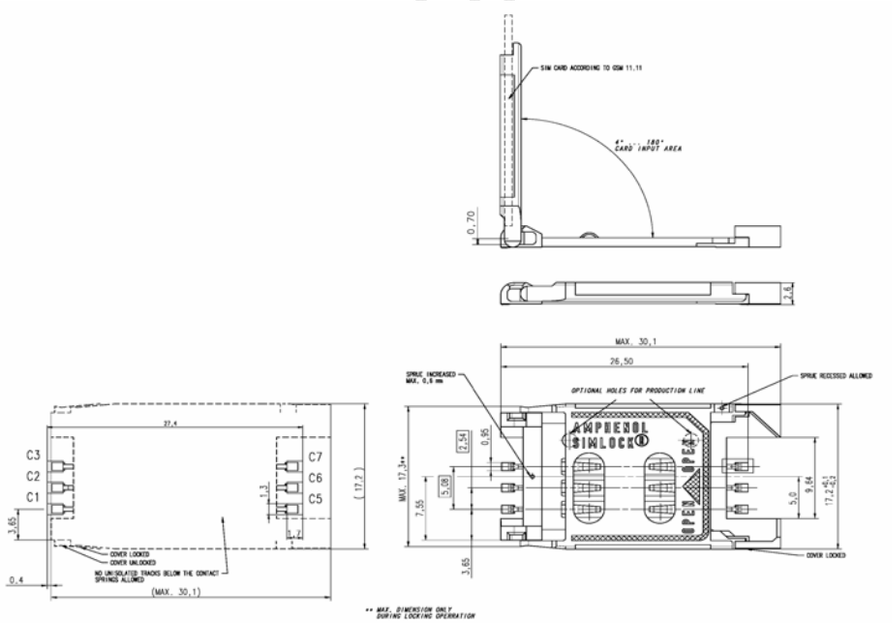


**Figure25: Amphenol C707 10M006 512 2 SIM card holder**

**Table16: Pin description (Amphenol SIM card holder)**

| Pin Name | Signal | Description |
|---|---|---|
| **C1** | SIM_VDD | SIM Card Power supply, it can identify automatically the SIM Card power mode，one is 3.0V±10%, another is 1.8V±10%. Current is about 10mA. |
| **C2** | SIM_RST | SIM Card Reset. |
| **C3** | SIM_CLK | SIM Card Clock. |
| **C5** | GND | Connect to GND. |
| **C6** | VPP | Not connect. |
| **C7** | SIM_DATA | SIM Card data I/O. |

## 3.12 LCD Display Interface

SIM900D provides a serial LCD display interface that supports serial communication with LCD device. When used as LCD interface, the following table is the pin definition. LCD interface timing should be united with the LCD device.

**Table17: Pin Definition of the LCD interface**

| Pin Name | Pin Number | Function |
|---|---|---|
| DISP_CLK | 13 | Display clock for LCD |
| DISP_DATA | 14 | Display data output |
| DISP_D/C | 16 | Display data or command select |
| DISP_CS | 46 | Display enable |

***Note: This function is not supported in the default firmware. There must be some customized firmware if you want. Please contact SIMCom for more details.***

The DISP_RST can select the KBR0 or GPO0, in addition to the KBR0 or GPO0 there is no another function.

## 3.13 ADC

SIM900D provides one auxiliary ADC0 (General purpose analog to digital converter.) as voltage input pin, which can be used to detect the values of some external items such as voltage, temperature etc. User can use AT command "AT+CADC" to read the voltage value on ADC. For detail of this AT command, please refer to ***document [1].***

**Table18: ADC specification**

| | MIN | Type | MAX | Units |
|---|---|---|---|---|
| Voltage range | 0 | - | 2.8 | V |
| ADC Resolution | - | 10 | - | bits |
| Sampling rate | - | - | 200K | Hz |

SIMCOM CONFIDENTIAL FILE

## 3.14 Behaviors of the RI

**Table19: Behaviours of the RI**

| State | RI respond |
|---|---|
| Standby | HIGH |
| Voice calling | Change LOW, then:<br>（1）Change to HIGH when establish calling.<br>（2）Use AT command ATH, the RI pin changes to HIGH.<br>（3）Sender hangs up, change to HIGH. |
| Data calling | Change LOW, then：<br>（1）Change to HIGH when establish calling.<br>（2）Use AT command ATH, the RI changes to HIGH. |
| SMS | When receive SMS, The RI will change to LOW and hold low level about 120 ms, then change to HIGH. |
| URC | Some URCs triggers 120ms low level on RI. ***For more details, please refer to document [10]*** |

If the module is used as caller, the RI will maintain high. However, when it is used as receiver, following is timing of ring.

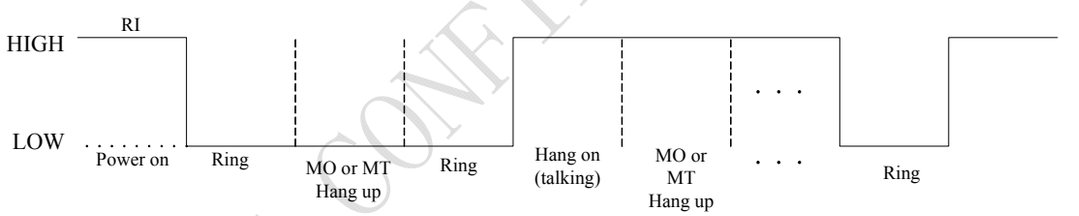


**Figure26: SIM900D Services as Receiver**

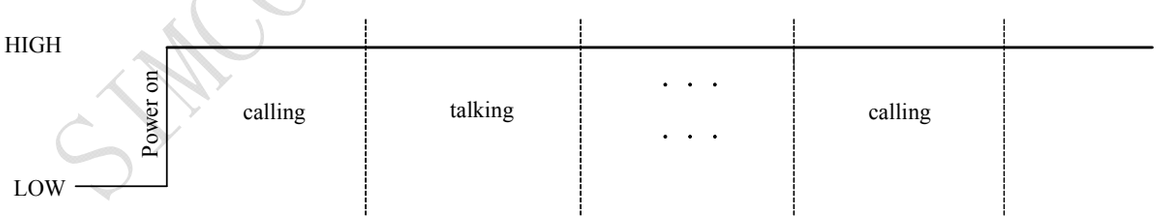


Whenever occurs, it will keep high.

**Figure27: SIM900D Services as caller**

SIMCOM CONFIDENTIAL

## 3.15 Network Status Indication

The NETLIGHT can be used to drive a network status indication LED lamp. The working state of this pin is listed in following table:

**Table20: Working state of the NETLIGHT**

| State | SIM900D function |
|---|---|
| Off | SIM900D is not running |
| 64ms On/ 800ms Off | SIM900D does not find the network |
| 64ms On/ 3000ms Off | SIM900D find the network |
| 64ms On/ 300ms Off | GPRS communication |

Provide a reference circuit for user, shown as following figure:

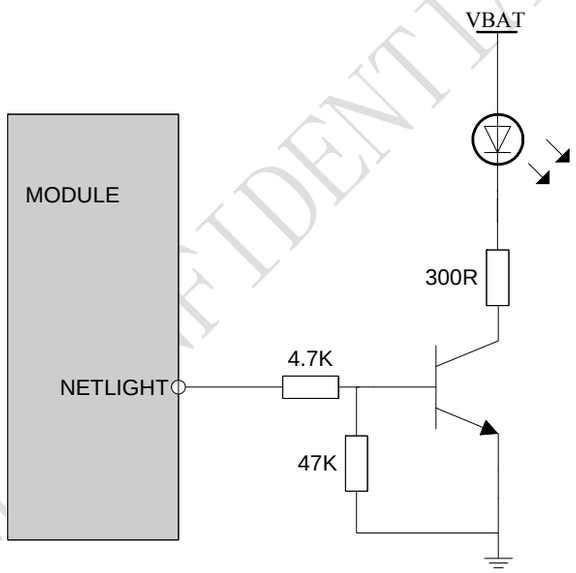


**Figure28: Reference circuit of NETLIGHT**

## 3.16 General Purpose Input Output (GPIO)

SIM900D provides a limited number of General Purpose Input/Output signal pin. The output and input voltage level of the GPIO can be set by AT command. For more details, please refer to ***document [1]***

SIMCOM CONFIDENTIAL

**Table21: Pin definition of the GPIO interface**

| Pin Name | Pin Number | Default Function | Default State |
|---|---|---|---|
| KBR0 | 10 | GPIO8 | Output Pull down |
| GPO1 | 40 | GPIO1 | Output Pull down |

***Note: This function is not supported in the default firmware. There must be customized firmware. Please contact SIMCom for more details.***

## 3.17 PWM

SIM900D contains one Pulse-Width Modulators (PWM) The PWM is intended for controlling a buzzer.

Features of buzzer PWM:
10-bit resolution for buzzer tone frequency generation from 200 Hz to 5 kHz
Tone frequency error < 1 % for all standard piano notes from 200 Hz to 5 kHz
Tone level control from 0 dB down to −24 dB in +4 dB steps
Audio mute

The PWM for the buzzer outputs a square wave at the desired tone frequency. The tone frequencies are programmable from 200 Hz to 5 kHz and can be re-programmed on-the-fly to generate monophonic audio ringtones or alert tones. The tone level can be adjusted over a 24 dB range in 4 dB steps, or it can be muted.

**Table22: Pin definition of the PWM**

| Pin Name | Pin Number | |
|---|---|---|
| PWM | 47 | Pulse-Width Modulator Signal |

SIMCOM CONFIDENTIAL FILE

# 4 Antenna Interface

SIM900D provides RF antenna interface. And customer's antenna should be located in the customer's main board and connect to module's antenna pad through microstrip line or other type RF trace which impendence must be controlled in 50Ω.

SIM900D material properties:
SIM900D PCB Material: FR4
Antenna pad: Gold plated pad

**Table23: Pin Definition of the ANT**

| Pin Name | Pin Number | |
|---|---|---|
| ANT | 33 | RF antenna interface |

## 4.1 Module RF Output Power

**Table24: SIM900D conducted RF output power**

| Frequency | Max | Min |
|---|---|---|
| GSM850 | 33dBm ±2db | 5dBm±5db |
| EGSM900 | 33dBm ±2db | 5dBm±5db |
| DCS1800 | 30dBm ±2db | 0dBm±5db |
| PCS1900 | 30dBm ±2db | 0dBm±5db |

## 4.2 Module RF Receive Sensitivity

**Table25: SIM900D conducted RF receive sensitivity**

| Frequency | Receive sensitivity（Typical） | Receive sensitivity(MAX) |
|---|---|---|
| GSM850 | -109dBm | -107dBm |
| EGSM900 | -109dBm | -107dBm |
| DCS1800 | -109dBm | -107dBm |
| PCS1900 | -109dBm | -107dBm |

SIMCOM CONFIDENTIAL FILE

## 4.3 Module Operating Frequencies

**Table26: SIM900D operating frequencies**

| Frequency | Receive | Transmit |
|---|---|---|
| GSM850 | 869 ～ 894MHz | 824 ～ 849 MHz |
| EGSM900 | 925 ～ 960MHz | 880 ～ 915MHz |
| DCS1800 | 1805 ～ 1880MHz | 1710 ～ 1785MHz |
| PCS1900 | 1930 ～ 1990MHz | 1850 ～ 1910MHz |

# 5 Electrical, Reliability and Radio Characteristics

## 5.1 Absolute Maximum Ratings

The absolute maximum ratings stated in Table 27 are stress ratings under non-operating conditions. Stresses beyond any of these limits will cause permanent damage to SIM900D.

**Table27: Absolute maximum ratings**

| Parameter | Min | Max | Unit |
|---|---|---|---|
| VBAT | - | 5.5 | V |
| Peak current of power supply | 0 | 3.0 | A |
| Voltage at digit pins* | -0.3 | 3.1 | V |
| $I_I$* | - | 10 | mA |
| $I_O$* | - | 10 | mA |

*For digital interface pins, such as GPIO, UART, LCD and PWM.

## 5.2 Operating Temperatures

The operating temperature is listed in following table:

**Table28: SIM900D operating temperature**

| Parameter | Min | Typ | Max | Unit |
|---|---|---|---|---|
| Ambient temperature | -30 | +25 | +80 | ℃ |
| Restricted operation* | -40 to -30 | | +80 to+ 85 | ℃ |
| Storage temperature | -45 | | +90 | ℃ |

* The SIM900D does work, but deviations from the GSM specification may occur.

SIMCOM CONFIDENTIAL FILE

## 5.3 Power Supply Ratings

**Table29: SIM900D power supply ratings**

| Parameter | Description | Conditions | Min | Typ | Max | Unit |
|---|---|---|---|---|---|---|
| VBAT | Supply voltage | Voltage must stay within the min/max values, including voltage drop, ripple, and spikes. | 3.4 | 4.0 | 4.5 | V |
| | Voltage drop during transmit burst | Normal condition, power control level for Pout max | | | 300 | mV |
| | Voltage ripple | Normal condition, power control level for Pout max<br>@ f<200kHz<br>@ f>200kHz | | | <br><br>50<br>2 | <br><br>mV |
| $I_{VBAT}$ | Average supply current | POWER DOWN mode<br>SLEEP mode(BS-PA-MFRMS=2 )<br>(BS-PA-MFRMS=5 )<br>(BS-PA-MFRMS=9 ) | | 30 | <br>1.5<br>1.2<br>1.0 | uA<br>mA<br>mA<br>mA |
| | | IDLE mode<br>GSM 850<br>EGSM 900<br>DCS1800<br>PCS1900 | | <br>22<br>22<br>22<br>22 | | <br><br>mA |
| | | TALK mode<br>GSM 850<br>EGSM 900<br>DCS1800<br>PCS1900 | | <br>235<br>252<br>176<br>176 | | <br>mA |
| | | DATA mode, GPRS (3 Rx,2Tx)<br>GSM 850<br>EGSM 900<br>DCS1800<br>PCS1900 | | <br>425<br>454<br>307<br>309 | | <br>mA |
| | | DATA mode, GPRS (4 Rx,1Tx)<br>GSM 850<br>EGSM 900<br>DCS1800<br>PCS1900 | | <br>262<br>280<br>208<br>205 | | <br>mA |

| | | | | | | |
|---|---|---|---|---|---|---|
| | Peak supply current (during Tx burst) | Power control level for Pout max. | | 2.0 | | A |

## 5.4 Current Consumption

Please refer to the following table for the values of current consumption.

**Table30: SIM900D current consumption (VBAT=3.8V)**

| **Voice Call** | |
|---|---|
| GSM 850/EGSM 900 | @power level #5 <300mA,Typical 250mA<br>@power level #10,Typical 110mA<br>@power level #19,Typical 80mA |
| DCS 1800/PCS 1900 | @power level #0 <200mA,Typical 175mA<br>@power level #10,Typical 95mA<br>@power level #15,Typical 75mA |
| **GPRS Data** | |
| **DATA mode, GPRS ( 1 Rx,1 Tx ) CLASS 8** | |
| GSM 850/EGSM 900 | @power level #5 <300mA,Typical 240mA<br>@power level #10,Typical 117mA<br>@power level #19,Typical 88mA |
| DCS 1800/PCS 1900 | @power level #0 <200mA,Typical 170mA<br>@power level #10,Typical 88mA<br>@power level #15,Typical 80mA |
| **DATA mode, GPRS ( 3 Rx, 2 Tx ) CLASS 10** | |
| GSM 850/EGSM 900 | @power level #5 <450mA,Typical 440mA<br>@power level #10,Typical 202mA<br>@power level #19,Typical 143mA |
| DCS 1800/PCS 1900 | @power level #0 <350mA,Typical 300mA<br>@power level #10,Typical 139mA<br>@power level #15,Typical 126mA |
| **DATA mode, GPRS ( 4 Rx,1 Tx ) CLASS 8** | |
| GSM 850/EGSM 900 | @power level #5 <300mA,Typical 270mA<br>@power level #10,Typical 155mA<br>@power level #19,Typical 125mA |
| DCS 1800/PCS 1900 | @power level #0 <300mA,Typical 205mA<br>@power level #10,Typical 126mA<br>@power level #15,Typical 119mA |

Class 10 is default set when the module works at data translation mode, the module can also work at class 8 set by AT command.

SIMCOM CONFIDENTIAL FILE

## 5.5 Electro-Static Discharge

The GSM engine is not protected against Electrostatic Discharge (ESD) in general. Therefore, it is subject to ESD handing precautions that typically apply to ESD sensitive components. Proper ESD handing and packaging procedures must be applied throughout the processing, handing and operation of any application using a SIM900D module.

The measured values of SIM900D are shown as the following table:

**Table31: The ESD endure statue measured table (Temperature: 25℃, Humidity:45% )**

| Part | Contact discharge | Air discharge |
|---|---|---|
| VBAT | ±5KV | ±10KV |
| GND | ±5KV | ±10KV |
| RXD, TXD | ±2KV | ±8KV |
| ANT | ±5KV | ±10KV |
| SPK1P/1N<br>SPK2P/2N<br>MIC1P/1N<br>MIC2P/2N | ±3KV | ±8KV |
| PWRKEY | ±2KV | ±8KV |
| Other port | TBD | TBD |

**Note: The PWRKEY is recommended to use the ESD protection component.*

SIMCOM CONFIDENTIAL

# 6 Mechanics

This chapter describes the mechanical dimensions of SIM900D.

## 6.1 Mechanical Dimensions of SIM900D

Following shows the Mechanical dimensions of SIM900D (top view, side view and bottom view).

**Dimensions shown in millimeters**

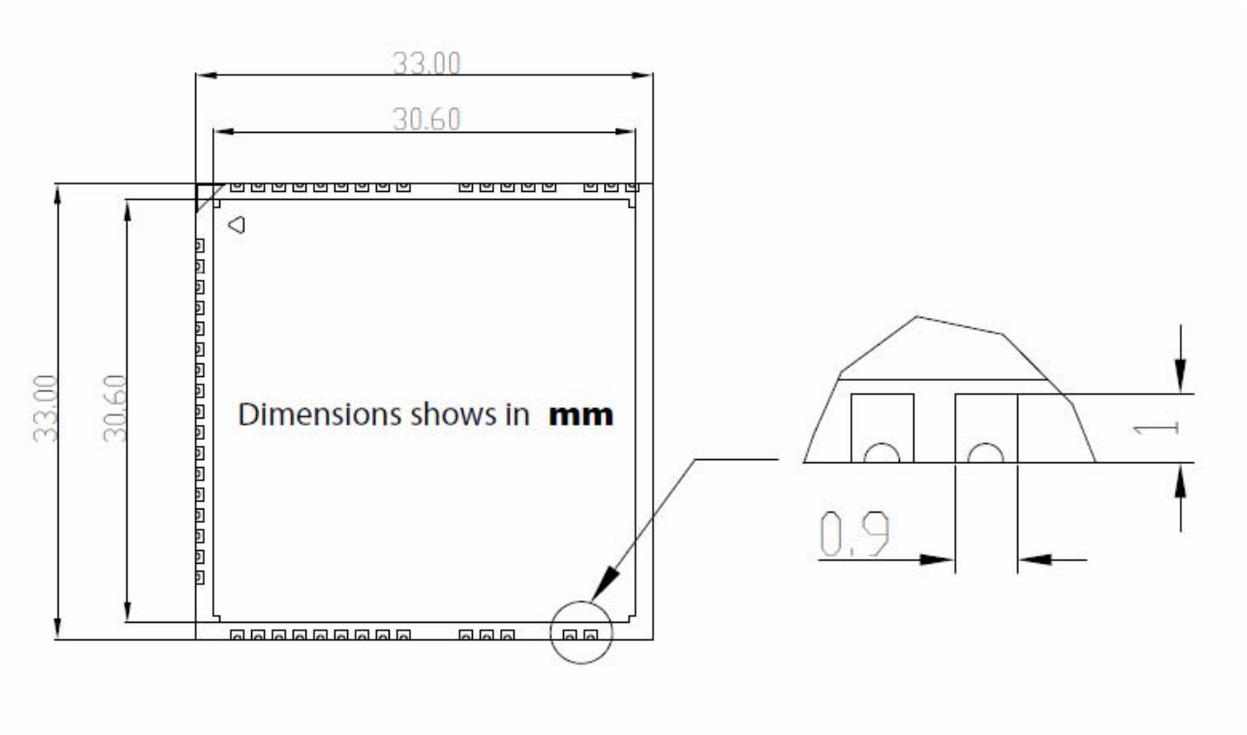


**Figure29: SIM900D TOP view**

SIMCOM

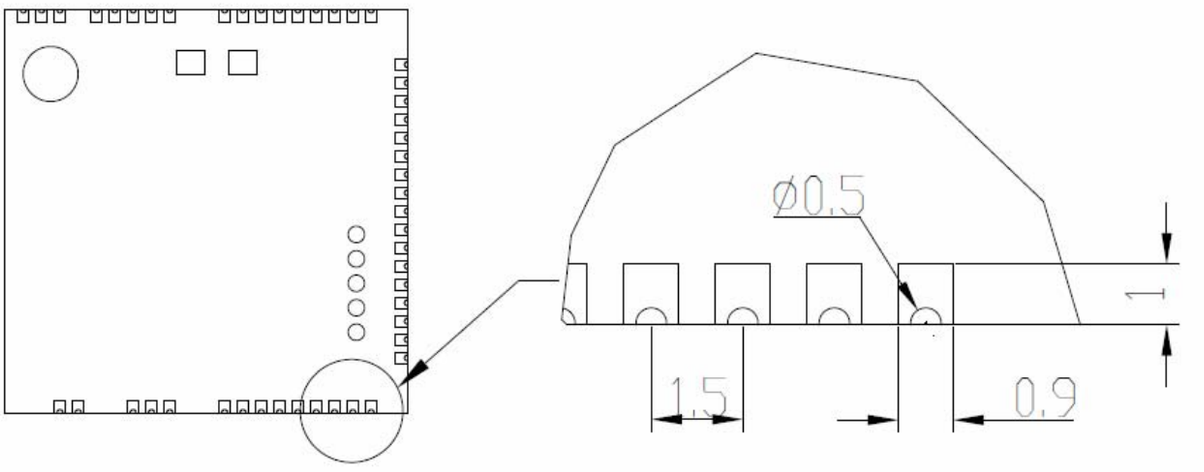


**Figure30: SIM900D bottom view**

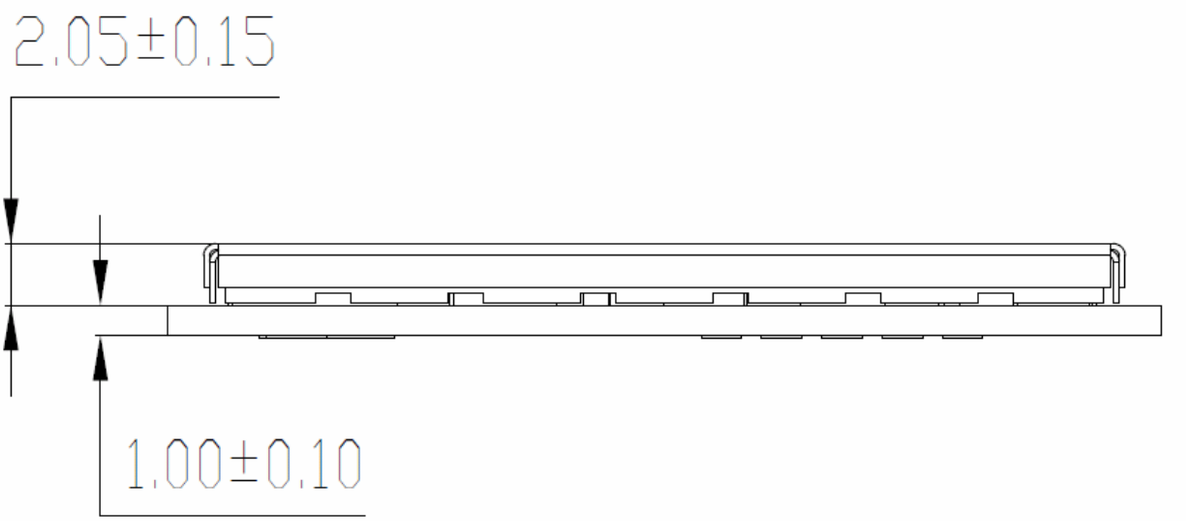


**Figure31: SIM900D SIDE view**

**FOOT PRINT RECOMMENDATION:**

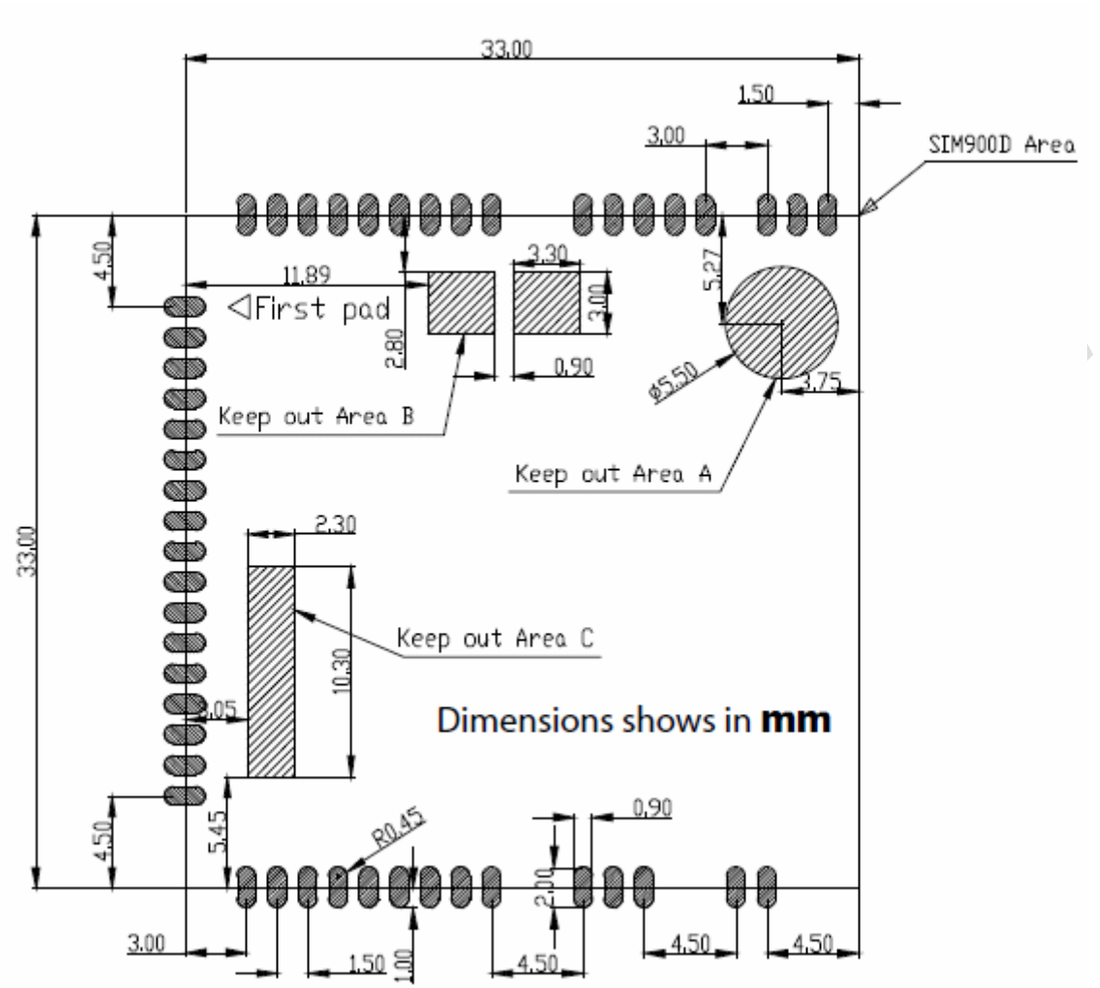


**Figure32: Footprint recommendation**

SIMCOM CO.

## 6.2 Top and Bottom View of the SIM900D

**Figure33: Top and Bottom view of the SIM900D**

## 6.3 PIN Assignment of SIM900D

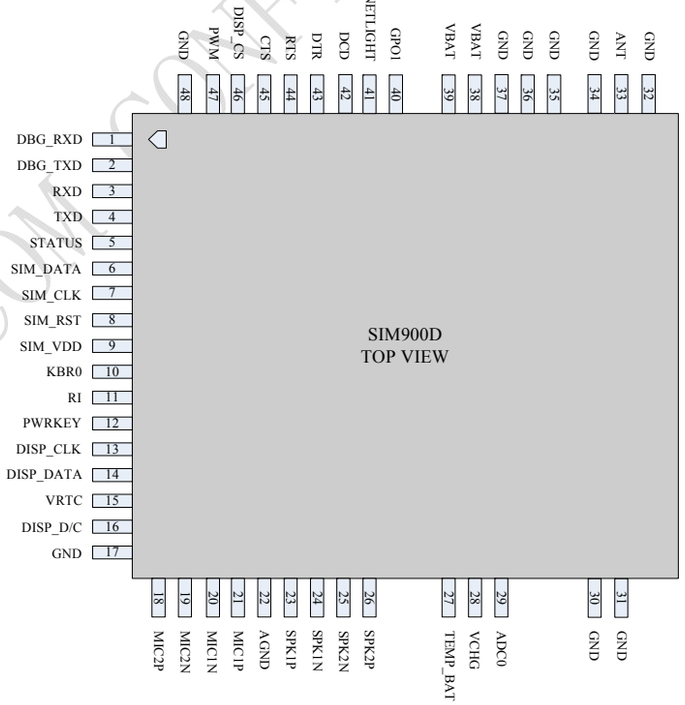


**Figure34: SIM900D pin out diagram (Top View)**

SIMCOM CONFIDENTIAL

**Table32: PIN Assignment**

| Pin NUM | NAME | Pin NUM | NAME |
|---|---|---|---|
| **1** | DBG_RXD | **2** | DBG_TXD |
| **3** | RXD | **4** | TXD |
| **5** | STATUS | **6** | SIM_DATA |
| **7** | SIM_CLK | **8** | SIM_RST |
| **9** | SIM_VDD | **10** | KBR0 |
| **11** | RI | **12** | PWRKEY |
| **13** | DISP_CLK | **14** | DISP_DATA |
| **15** | VRTC | **16** | DISP_D/C |
| **17** | GND | **18** | MIC2P |
| **19** | MIC2N | **20** | MIC1N |
| **21** | MIC1P | **22** | AGND |
| **23** | SPK1P | **24** | SPK1N |
| **25** | SPK2N | **26** | SPK2P |
| **27** | TEMP_BAT | **28** | VCHG |
| **29** | ADC0 | **30** | GND |
| **31** | GND | **32** | GND |
| **33** | ANT | **34** | GND |
| **35** | GND | **36** | GND |
| **37** | GND | **38** | VBAT |
| **39** | VBAT | **40** | GPO1 |
| **41** | NETLIGHT | **42** | DCD |
| **43** | DTR | **44** | RTS |
| **45** | CTS | **46** | DISP_CS |
| **47** | PWM | **48** | GND |

SIMCOM

## 6.4 The Ramp-Soak-Spike Reflow Profile of SIM900D

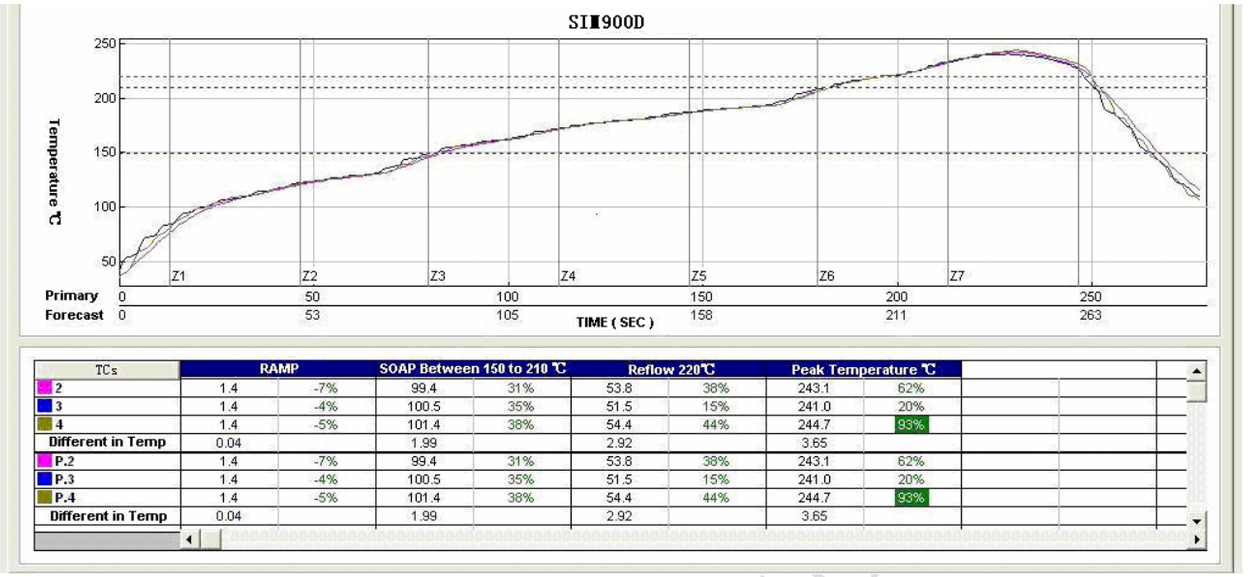


| TCs | RAMP | | SOAP Between 150 to 210 ℃ | | Reflow 220℃ | | Peak Temperature ℃ | |
|---|---|---|---|---|---|---|---|---|
| 2 | 1.4 | -7% | 99.4 | 31% | 53.8 | 38% | 243.1 | 62% |
| 3 | 1.4 | -4% | 100.5 | 35% | 51.5 | 15% | 241.0 | 20% |
| 4 | 1.4 | -5% | 101.4 | 38% | 54.4 | 44% | 244.7 | 93% |
| Different in Temp | 0.04 | | 1.99 | | 2.92 | | 3.65 | |
| P.2 | 1.4 | -7% | 99.4 | 31% | 53.8 | 38% | 243.1 | 62% |
| P.3 | 1.4 | -4% | 100.5 | 35% | 51.5 | 15% | 241.0 | 20% |
| P.4 | 1.4 | -5% | 101.4 | 38% | 54.4 | 44% | 244.7 | 93% |
| Different in Temp | 0.04 | | 1.99 | | 2.92 | | 3.65 | |

**Figure35: The ramp-soak-spike reflow profile of SIM900D**

SIMCOM CONFIDENTIAL

**Contact us:**

**Shanghai SIMCom Wireless Solutions Ltd.**
Add: SIM Technology Building，No.633，Jinzhong Road，Changning District，Shanghai P.R. China 200335
Tel: +86 21 3235 3300
Fax: +86 21 3235 3301
URL: www.sim.com/wm

SIMCOM CONFIDENTIAL FILE